ISSN 1018-5593

Commission of the European Communities

radiation protection

Research and training programme
Revision 1988-89

Monitoring and surveillance in accident situations

Post-Chernobyl action

Report

EUR 12557 EN

Commission of the European Communities

Research and training programme
Revision 1988-89

Monitoring and surveillance in accident situations

Post-Chernobyl action

Edited by
K. Chadwick, H. Menzel

Commission of the European Communities
Rue de la Loi 200
B-1049 Brussels

Directorate-General
Science, Research and Development

1993

EUR 12557 EN

Published by the
COMMISSION OF THE EUROPEAN COMMUNITIES
Directorate-General XIII
Information Technologies and Industries, and Telecommunications
L-2920 Luxembourg

Cataloguing data can be found at the end of this publication

Luxembourg: Office for Official Publications of the European Communities, 1993

ISBN 92-826-5330-7

Printed in Belgium

Preface

The Chernobyl accident, which occurred on 26 April 1986, presented major challenges to the European Community with respect to the practical and regulatory aspects of radiation protection, public information, trade, particularly in food, and international politics. The Chernobyl accident was also a major challenge to the international scientific community which had to evaluate rapidly the radiological consequences of the accident and advise on the introduction of any countermeasures. Prior to the accident at Chernobyl, countermeasures to reduce the consequences of radioactive contamination had been conceived largely in the context of relatively small accidental releases and for application over relatively small areas. Less consideration had been given to the practical implications of applying such measures in case of a large source term and a spread over a very large area.

The Radiation Protection Research and Training Programme was influential in a number of important initiatives taken within the Community immediately after the accident. Information was collected by Community scientists and, from it, an assessment made within days of the possible consequences. This showed that the health impact on the population of the European Community was not expected to be significant. About four weeks after the accident, the Programme, together with the US Department of Energy, organised a meeting in Brussels during which the data on dispersion of radioactive material were discussed and evaluated. Several other meetings followed soon after on the transfer of radionuclides in the food chain and possible health effects. These meetings were carried out in close co-operation with the DG XI (Directorate General, Environment, Consumer Protection and Nuclear Safety) within the CEC, and, externally, with international organisations such as the International Atomic Energy Agency (IAEA) and the World Health Organisation (WHO). In addition, the Commission convoked a Committee of high-level independent scientists to assess the scientific evidence from current research in view of recent nuclear incidences, to consider the possible implications for the Basic Standards and emergency reference levels and to advise the Commission on future action in radiological protection including research. (EUR 11449 EN).

Soon after the accident, additional research requirements were identified by the Programme; these were mainly better methods to assess accident consequences and the further improvement of off-site accident management. Several existing contracts were reoriented and new contracts were placed; however, the financial means then available within the Programme were insufficient to fund the additional research identified as necessary. A proposal for a revision of the Programme was, therefore, elaborated in 1986. It comprised 10 specific "post-Chernobyl" research actions. This revision, with an additional budget of 10 MEcu for a period of two years, was adopted by the Council of Ministers on 21 December 1987. With the help of the Management and Coordination Advisory Committee (CGC) "Radiation Protection" a number of institutes was identified to carry out the research in a co-operative manner, and the research began in the spring of 1988.

These post-Chernobyl activities have now been completed. Detailed reports on each of these studies and an additional volume containing the executive summaries of all reports are now available.

- Evaluation of data on the transfer of radionuclides in the food chain,
- Improvement of reliable long-distance atmospheric transport models,
- Radiological aspects of nuclear accident scenarios,
  A. Real-time emergency response systems,
  B. The RADE-AID system,
- Monitoring and surveillance in accident situations,
- Underlying data for derived emergency reference levels,
- Improvement of practical countermeasures against nuclear contamination in the agricultural environment,
- Improvement of practical countermeasures against nuclear contamination in the urban environment,
- Improvement of practical countermeasures: preventive medication,
- Treatment and biological dosimetry of exposed persons,
- Feasibility of studies on health effects due to the reactor accident at Chernobyl.

The research undertaken within the "post-Chernobyl" actions has added considerably to the understanding of the basic underlying mechanisms of the transfer of radionuclides in the environment, of the treatment of accident victims and of how the environmental consequences of accidents may be mitigated. In addition, progress has been made in the setting up environmental surveillance programmes development of predictive and decision-aiding techniques, the implementation of which will lead to significant improvements in off-site accident management. Several new ideas and lines of theoretical and practical research have originated from the post-Chernobyl research and these have already been integrated into the ongoing Community Radiation Protection Research Programme. A further important feature which should not be overlooked, is the close and effective collaboration of many institutes in the research; this has markedly strengthened the ties between Community institutes and scientists. The outcome of all of this work is that the Community and all other countries are now better prepared and co-ordinated should a significant release of radioactivity ever occur again

Further research is continuing within the current Radiation Protection Research and Training Programme 1990-1991 on a number of the "post-Chernobyl" topics; these also form part of the proposal of the specific Programme on "Nuclear Fission Safety" 1992-1993, e.g. real-time emergency management systems, development of countermeasures in the agricultural environment, treatment of radiation accident victims, etc. Moreover, the Community Programme is currently making a significant contribution to an international evaluation, being undertaken by IAEA at the request of the Soviet Government, on the consequences in the USSR of the Chernobyl accident and of the measures being taken to ensure safe living conditions for the affected populations.

S. Finzi
Director DG XII.D
Nuclear Safety Research

G.B. Gerber
Head of Unit DG XII.D.3
Radiation Protection Research

E. Bennett
Director DG XI.A
Nuclear Safety, Industry
and Environment, Civil
Protection

Participating Institutions

Ente Nazionale per l'Energia Elletrica, Direzione delle Construzioni (ENEL DCO)
3 Via G.B. Martini, 00198 Roma, Italy

L. Bramati, C. Mattei, G. Pandolfi,

Univ. Politécnica de Catalunya, Inst. Techn. Energ.
Diagonal 647, 08028 Barcelona, Spain

X. Ortega,

Service Central Protection Rayonnements Ionisants (SCPRI)
Boîte Post. No 35, 78110 Le Vésinet, France

P. Pellerin, J.P. Moroni,

National Radiological Protection Board NRPB
Oxon OX11 ORQ Chilton Didcot, United Kingdom

a) **P.H. Burgess, D.R. Mc Clure, M.J. Clark,**
b) **N. Green, B.T. Wilkins,**

Physikalisch Technische Bundesanstalt PTB
Bundesallee 100, 3300 Braunschweig, Federal Republic of Germany

U. Lauterbach,

Risø National Laboratory, Nuclear Safety Research Department
4000 Roskilde, Denmark

O. Walmod-Larsen, H. Ahlers, J. Lippert, F. Nielsen.

Monitoring and Surveillance in Accident Situations
Executive Summary

i. Introduction

Monitoring and surveillance after an accidental release of radionuclides to the environment can be considered in four categories:

detection of the accident;

early measurements to determine the need for countermeasures;

continuing surveillance of radionuclides in the environment, in foods and in people; until the situation returns to normal, to assess doses, to demonstrate that countermeasures have provided adequate protection and to provide public reassurance;

research studies, to follow the behaviour of radionuclides in the environment, in foods and in people so as to improve predictive models.

Experience gained as a result of the Chernobyl reactor accident suggested that there was scope for improvement with respect to the practical aspects of the measurement and collection of reliable data and their communication in suitable forms to the decision-making authorities and the public. Studies were required to define how the multitude of measurements required can be made rapidly and reliably by various organisations, and how their standardisation and harmonisation can be achieved.

The Commission therefore re-directed its programme to accommodate additional research programmes concerned with preparedness for monitoring and surveillance of any future accident. Seven research contracts were initiated as a result. Progress achieved in the course of these one-year contracts is summarised below. Conclusions are drawn and recommendations made for future work.

ii. Accident Detection Networks

There were two contracts concerned with the detection of unusual levels of dose rate and the interpretation of readings from simple dose-rate instruments and alarm monitors.

One, by Walmod-Larsen et al of Riso National Laboratory, Denmark, was concerned with development of a nation-wide on-line early warning monitoring network with high sensitivity to accidental discharges and good discrimination against variations in natural radiation levels. The objective given to the Laboratory was that the system should be able to detect an increase due to man-made radionuclides corresponding to a 10% increase in the natural background level.

A test station as constructed consisting of:

a wide-range ionisation chamber, with a range of 0.01 μSv h^{-1} to 100 mSv h^{-1};
a NaI (Tl) detector with a multi-channel analyser;
a rain intensity gauge.

The instrumentation is controlled by a micro-computer, which stores the data and transmits data to a central computer via the public telecommunications network. The hut housing the equipment is temperature controlled.

Data from the ionisation chamber have been collected for more than two years. Careful analysis of the rate of variation of dose rate and rainfall rate have led to the formulation of an algorithm that permits an alarm to be raised if the dose-rate level increases by 5% in dry weather or 20% in wet weather.

Detailed analysis of the results from the NaI(Tl) spectrometer is in progress. The intention is that, if the ion chamber reading exceeds the pre-set warning value, comparison of a recent NaI(Tl) spectrum with a mean spectrum accumulated over several days will reveal whether the higher level is due to radon decay products or man-made radionuclides.

When tests on the prototype station are complete, a nation-wide network of ten stations will be set up to act as an early warning system for deposition of man-made radionuclides onto

Danish territory.

The second contract in this category was by Ortega et al of the Universidad Politecnica de Catalunya. The contract consisted of: a survey of monitoring networks in members states of the European Community; analysis of results obtained over a two-year period from networks around two nuclear power stations sited in Spain, calculations of detector response to natural and man-made radionuclides in the environment; development of calibration techniques for environmental dose-rate monitoring; development of a new electrometer for use in measuring environmental dose rates.

The survey addressed the existence of monitoring networks at the time of the Chernobyl reactor accident as well as networks planned or implemented since that time. The environmental surveillance systems in existence at the time of the accident were mainly in research centres or at nuclear power stations sites. All systems proved sufficiently sensitive to detect the Chernobyl radioactivity. As a result of the accident, most countries developed plans for national monitoring networks, but little consideration has been given to linking networks between countries. The networks are largely based on Geiger-Muller counters, although ionisation chambers are used in some. Provision has also been made in some plans for measurement of radionuclides in airborne particles and radio-iodine in both particulate and vapour forms.

The existing networks in Catalonia consist of four measuring stations around each of two nuclear power stations sites. Each station has a monitor for measuring environmental dose rates in the range 0.01 $\mu Sv\ h^{-1}$ to 100 $mSv\ h^{-1}$. This wide range is achieved by the use of two Geiger-Muller probes. Each station is connected to a computer on the power station site which then transmits data to a control computer at regional government headquarters. A detailed analysis has been made of data from these monitoring stations collected over a two-year period. The availability of the stations has been between 75% and 90%. Most failures were probably due to breakdowns in the data transmission telegraphic lines. During the two-year period studied, there were eight occasions when abnormal values were observed i.e. values higher than three standard deviations above the mean of all measurements obtained in the previous six days. Correlations have been observed between rainfall and increase in dose rate, with a time delay of between one and two hours.

A mathematical model has been developed to predict dose rates due to natural and man-made radionuclides in the environment. To provide validation of the model, dose rates on beaches along the Catalan coastline were measured with an ionisation chamber and samples were collected for laboratory analysis of radionuclide content. Good correlation was found between the measured and calculated dose rates.

iii. Dose-rate measuring instruments

Burgess et al, National Radiological Protection Board, UK, have evaluated five instruments suitable for measuring environmental background dose rates and assessed their suitability for use in emergency situations. Four of the instruments tested were those commonly used within the European Community, but one relatively new instrument was included. The instruments were: three scintillation detectors; one energy-compensated Geiger-Muller detector; and one high pressure ionisation chamber.

A comprehensive evaluation programme was followed. Laboratory measurements included: linearity tests, to determine the variation in response with indicated dose and dose rate; energy response, to check the variation in response with changes in photon energy; polar response, to investigate the variation in response with changes of direction of incident radiation, tests of sensitivity to changes in temperature and humidity; determination of battery life under normal conditions. In addition, each instrument was evaluated in the field to assess ease of use in realistic operating conditions.

High-pressure ionisation chambers show the quickest response to changes in gamma radiation levels, but all the instruments tested are capable of giving a reliable indication of significant changes in environmental dose rates. The instruments which use scintillation detectors operating in the current mode show the greatest variations in response when subject to significant temperature changes. This is a disadvantage for field measurements. In contrast, instruments based on high-pressure ionisation chambers and energy-compensated Geiger-Muller detectors are much less sensitive to temperature changes.

All instruments were also evaluated by making measurements at a number of sites including areas of normal and elevated natural radionuclides, an area of high deposition of Chernobyl radioceasium and an area contaminated with industrial discharges. The evaluation considered matters such as ease of use, portability, weather proofness and time taken to make a measurement.

Details are given in the full report.

iv. Measurement of surface contamination with ß-emitting radionuclides

Lauterbach et al, Physikalisch-Technische Bundesanstalt (PTB), FRG, have evaluated commercially available surface contamination monitors. The evaluation was carried out in collaboration with 18 institutes which measured surface activity sources calibrated at PTB. The radionuclides were chlorine-36, cobalt-60, strontium-90/yttrium-90 and promethium-147, and the activities were involved in this programme, mainly Geiger-Muller counters, scintillation detectors and proportional counters with methane, butane, xenon or a mixture of butane and propane as filling gases.

Measurements were made under carefully controlled conditions by trained operators who knew the identity of the radionuclide. Even so, the activities reported by the participants varied over almost an order of magnitude, even for instruments of the same type. In the case of accidental contamination, the composition of the radionuclide mixture could be quite complex and not known. It is recommended that measurements with portable contamination meters should be used to distinguish between more and less contaminated areas and as a guide to where samples should be taken for laboratory measurements; the reading of the instruments should not be used as an indication of the true surface deposit, without careful evaluation of the measurements.

v. In situ gamma-ray spectrometry

Bramati et al (ENEL, Italy) have evaluated the technique of in situ gamma-ray spectrometry for measurement of surface concentration of radionuclides and radiation exposure rate in situations of accidental contamination. The instrumentation was selected on the basis of compact size and light weight, together with a high level of efficiency and resolution. The detector was a hyper-pure germanium detector with 1.76 keV resolution and 20% efficiency at 1.3 MeV. The cryostat of 7 litres capacity permitted operations for 3 to 4 days before refilling with liquid nitrogen was required. The rest of the equipment included: a portable analyser, a personal computer with hard disk and printer; a telescopic tripod for mounting the detector. This complete set of equipment was contained in two cases with a total weight of 60 kg. Ancillary equipment included: a generator to provide the power supply of the printer; 25 l dewar for liquid nitrogen storage. A surface concentration of 10^4 Bq m^{-2} can be measured in a few minutes, at 3% confidence level.

The performance of the in situ gamma-ray spectrometry technique was evaluated in two measurement campaigns; one in an area of low natural activity but high Chernobyl deposition; the other in an area of high natural radiation and low Chernobyl deposition. In addition to in situ gamma-ray spectrometry, dose rates were measured with two different instruments and soil samples were collected for laboratory analysis. All measurement results were in good agreement. However, it was noted that gamma-ray spectra acquired in the field with simple processing equipment require careful analysis by trained operators.

vi Rapid methods of radionuclide analysis

In the immediate aftermath of an accidental release of radionuclides into the environment, measurement of activity concentrations in environmental materials are required rapidly to aid decisions on the need for countermeasures. In the case of accidental releases from nuclear power reactors, most of the radionuclides of potential radiological importance are gamma-ray emitters and so their activity concentration can be determined directly by measurement with high-resolution germanium detectors and the minimum of sample processing. However, other potential types of accidents releasing other radionuclides should not be neglected and Green and Wilkins (National Radiological Protection Board, UK) have evaluated rapid methods of radiochemical analysis for actinides and for radioisotopes of strontium.

Published procedures for the radiochemical isolation of actinides were reviewed and it was found that none offers particular advantages in terms of speed. All procedures are quite complex and it was therefore recommended that, in an emergency, laboratories should make use of their established and validated methods. For many environmental materials, the plutonium content can be determined by alpha spectrometry following radiochemical isolation within 20 hours, with results for higher actinides being available the following day. Unfortunately, results for air filters, a medium of urgent interest, can only be achieved on a longer timescale because of the greater time required for ashing.

The capability of direct measurement of the low-energy photons with hyper-pure germanium detectors was also investigated. This technique is of practical use only when used for measurement of the photon emissions from the decay of americium-241. Inference of the content of plutonium isotopes then requires knowledge of the radionuclide composition of the release.

The normal procedure for determination of strontium-90 in routine analyses requires measurement of the beta emissions of its decay product, yttrium-90, following a delay of about 3 weeks for ingrowth. Such a protracted procedure is clearly unacceptable in an emergency. Furthermore, strontium-89 may also be present. A method based on the determination of strontium-89 by Cherenkow counting and subsequent measurement of strontium-90 by liquid scintillation counting has been tested and validated. Full details are given in the report.

One of the most important recommendations is that the required detection limits should be specified in advance so that sample sizes can be decided. This is of fundamental importance because the time required for sample preparation is dependent upon sample size.

vii. In vivo measurements

Where possible, direct measurements of radionuclides in the human body provide independent confirmation of doses estimated from limited environmental measurement and predictions of human intake by inhalation and ingestion following transfer of radionuclides to foodstuffs. Experience following the Chernobyl reactor accident has shown that they are also more directly reassuring to members of the public than are such calculations.

Pellerin et al (SCPRI, France) have continued development of mobile monitoring facilities, designed primarily for measurement of iodine isotopes in thyroid and gamma-ray emitting radionuclides in the human body. The equipment used for whole body measurement can also be used for measuring radionuclides in environmental samples. The philosophy was to choose standardised units that could be deployed in small vans, in large trucks or in a specially-designed railway carriage. The intention is to be able to perform measurements on large number of people anywhere within France within 24 to 48 hours after an accidental release of radioactive materials. The equipment could also be made available for use elsewhere in Europe.

viii. Conclusions and Recommendations

1. Perhaps inevitably, most contracts focussed on monitoring and surveillance following accidents at nuclear installations which would involve the release of gamma-ray emitting radionuclides. One (Green and Wilkins) considered the measurement requirements for accidents involving a substantial release of actinides and radioisotopes of strontium and one (Lauterbach et al) considered surface contamination with beta-emitting radionuclides. Emergency response planning, at the national level, must consider accidents that may not release gamma-ray emitting radionuclides. Specific consideration should be given to accidents involving nuclear weapons or satellites powered by plutonium sources.

2. Since the Chernobyl reactor accident, many countries have developed national monitoring systems to detect accidental releases of radionuclides. These are mostly based on dose-rate measuring devices. Consideration should be given to:
   - (i) linking data from national networks into a Community-wide network;
   - (ii) improved methods of distinguishing increases in dose rate due to accidental releases from natural variations in background levels;
   - (iii) automatic air-sampling and analysis, so as to provide immediate identification of the radionuclides involved in an accidental release. An independent evaluation of currently-available equipment would be useful.

3. None of the contractors in this programme considered sampling from aircraft to determine the extent and composition of the plume of radioactive material. Techniques for isokinetic sampling of particle- and gas-phase radionuclides from aircraft exist. Some consideration should be given to the availability of suitable equipment and aircraft within the Community and to how such data can be used in predictive modelling of the trajectory of the plume and estimating the radiological consequences for the areas affected.

4. Several contracts within this programme considered various methods of measuring surface deposition of radionuclides: gamma-ray dose-rate measurement (Burgess et al); surface contamination measurement (Lauterbach et al); in situ gamma-ray spectrometry (Bramati et al). Dose-rate measurements are easy to do, but difficult to interpret; they should be used as a guide to areas where further investigation is required. Surface contamination measurements appear to be difficult to undertake in a consistent manner. In situ gamma-ray spectormetry provides the required information, but requires expensive instrumentation and experienced operators.

5. None of the contractors considered aerial surveillance of deposited activity. This can be achieved by deploying dose-rate measuring instruments (but the same limitation applies as above) or high-resolution germanium detectors in aircraft. Measurement techniques and mapping techniques exist. Consideration needs to be given to the administrative arrangements needed so that adequate monitoring of affected areas of the Community can be achieved rapidly in order to demonstrate to the public and to decision makers that all affected areas have been identified.

6. There is a need for simple screening of contaminated goods, animals and people, in order to distinguish between those uncontaminated and those requiring further investigation. The interpretation of such measurements will depend upon the radionuclide composition, and appropriate advice needs to be developed for each particular circumstance.

7. Experience following the Chernobyl reactor accident suggests that there is a need for measurements of radionuclides in people, as a means of reassurance.

8. In the event of an accident, many organisations will undertake measurements of dose rates and of radionuclides. There is a need to provide guidance in advance of any future accident on sampling, measurement and reporting procedures, so as to ensure the quality and comparability of the data.

9. There is a need for central collation of data, both at national and at Community level. More consideration needs to be given to methods of data handling, display and interpretation both for public information and for decision making.

10. Emergency response plans must be prepared in advance of any accident, they should be regularly reviewed and updated, staff must be trained and procedures must be exercised.

CONTENTS

V. AN ASSESSMENT OF RAPID METHODS OF RADIONUCLIDE ANALYSIS FOR USE IN THE IMMEDIATE AFTERMATH OF AN ACCIDENT 103

VII. INTERPRETATION OF READINGS FROM ALARM MONITORS 157

I. IN SITU GAMMA RAY SPECTROMETRY IN ACCIDENTAL SITUATIONS

L. BRAMATI, C. MAFFEI, G. PANDOLFI
ENEL, ROME (ITALY)

1. INTRODUCTION

The use of gamma-ray spectrometry for the direct determination of environmental radioactivity is referred to as "in situ gamma-ray spectrometry" (ISGS) (ref. 1,2,3). With this tecnique it is possible to determine the concentration in the soil of radioisotopes, the surface concentration of fall-out and radiation exposure rate. Within the framework of the "Radiation Protection" Research Program of the Commission of the European Communities (EEC) ENEL, working in cooperation with CISE, has carried out a research and development program on an ISGS system appropriate for use in accident situations. The main objectives were the followings:

- selection of instrumentation for high-resolution ISGS;
- preparation of a specifically designed computer program for obtaining and analysing spectra in-situ. Besides the in-situ gamma spectrometry measurements, the same strumentation allows measurement of the radioactivity concentration in environmental samples in a portable cylindrical shield.

2. DESCRIPTION OF THE APPARATUS

The choice of the basic instrumentation for the ISGS (detector, cryostat and analyzer) pointed to a CANBERRA detector and multichannel analyzer, apparatus which presented the required characteristics, meaning compact size and light weight coupled with a high level of efficiency and resolution. Similar criteria were adopted in selecting the personal computer (ZENITH) and the printer (EPSON), (see fig. 1 and 2). The detector is an HPGe, closed end, of 47 x 53 mm, with 1.76 keV resolution (FVHM) and 20 % efficiency at 1332 keV. The cryostat gives an autonomous range of 3-4 days. The analyzer is a CANBERRA S10 PLUS, 4096 channels; the PC is a ZENITH DATA SYSTEMS Z-180, 640 kb RAM memory, 3.5" floppy disk and 10 Mb hard disk. The detector is mounted on a telescoping tripod.

As a power supply we use a YAMAHA EF600 generator, 400 W power. The complete set of equipment is contained in two cases of 60 kg total weight. Each individual component comes with batteries; the external power supply is used only for printer. To perform measurements on environmental samples a cylindrical shield is provided (Fig. 3), 120 kg in weight, divided into six parts. The shield houses the detector head and a container for 500-ml samples.

3. METHOD

3.1 In situ gamma ray spectrometry

a) basic theory

The relationship between the observed area of the photopeak and the corresponding exposure rate or concentration is as follows:

$$N/I\ (\text{or } A) = N^{\circ}/F * N/N^{\circ} * F/I\ (\text{or } A) \qquad (1)$$

where:

N° = photopeak area in a unit of time [cpm];
I = exposure rate [μR/h];
A = concentration in/on the ground [Bq/kg or Bq/m2];
N°/F = intrinsic efficiency factor for the detector employed, expressed as the ratio between the photopeak area and the flux F [f/cm2/s] of incident photons reaching the detector parallel to the axis of longitudinal symmetry [cpm/f/cm2/s]; N/N°=factor that takes into account the possibility of an anisotropic response of the detector to incident radiation with different angles [cpm/cpm]; F/I(or A)=ratio between the flux of photons of energy considered to be incident on the detector and the exposure rate (or concentration) of the isotope under consideration [f/cm2/s/μR/h (or Bq/kg-Bq/m2)]. It should be noted that:

- N°/F is otbained in the laboratory from a standard source placed at a known distance from the detector;
- N/N° is obtained in the laboratory by rotating the standard source with respect to the axis of symmetry;
- F/I and F/A were calculated and tabulated by Beck (ref.2), integrating the photon fluxes due to the unitary concentrations in/on the ground.

b) Calculation program

The CISE has developed a calculation code to transfer the spectrum from the multichannel analyzer to the PC and to analyze it. The analysis of the spectrum is based on the identification of the isotopes, and on calculation of the photopeak area. With reference to the relation (1) it is then possible to determine the exposure rate and the concentration. In the event that a nuclide has gamma emissions at different energies, a test for the significance is performed for each energy; if the result is positive, a weighted mean is calculated; if not, the inconsistency is recorded. The output of the ISGS program is a printout with the exposure rate and the concentration for fall-out and natural radioisotopes. The software as well as the instrumentation are extensively described in ref. 4.

c) Sensibility

In a one-hour counting period, the number of net pulses for the following isotopes are:

- 2 per Bq/m2 for ^{134}Cs and ^{137}Cs
- 3 per Bq/m2 for ^{131}I
- 1.5 per Bq/m2 for ^{60}Co
- 60 per Bq/kg for uranium (over three peaks)
- 45 per Bq/kg for thorium (over three peaks)
- 7 per Bq/kg for ^{40}K

Therefore a surface concentration of 10000 Bq/m2, corresponding to a food contamination below any action level, can be measured in a few minutes, at 3% confidence level.

3.2 Sample measurement

a) General analysis description

Basically, the analysis of the pulse-height spectrum carried out by Spectran (software package produced by Canberra), consists of the following steps:

1) Locate peaks of interest in the spectrum.
2) Determine the background corrected area and the statistical uncertainty in the area of each peak.

3) Identify the radionuclides that produced the spectrum.
4) Determine the activities of the nuclides of interest, including decay corrections.

Before steps 3) and 4) above can be carried out, the system must be calibrated in order to relate gamma-ray energy to pulse-height, and radionuclide concentrations to measured peak areas. This is accomplished by determining the positions and areas of spectral peaks produced by gamma rays of known energies and intensities, and generating appropriate calibration parameters that may be used in subsequent analyses. For energy and efficiency calibration use was made of a 500-ml liquid standard source containing radioisotopes having the activities given in Table 1. The equation correlating channel and energy resulted to be:

Energy (keV) = -7.69E-01+7.02E-01*Ch-3.66E-07*Ch2.

Fig. 4 shows the curve of efficiency as a function of energy for the 500-ml geometry. Measurement of the background was performed in an area having a background radiation level of 10 μR/h, for a collection time of 5000 seconds. The resulting spectrum shows a ^{40}K peak at 1460 keV and a ^{232}Th peak at 2614 keV, besides other minor peaks, as shown in Table 2. This spectrum was used to correct the measurements performed subsequently on environmental samples.

4. RESULTS

4.1 In situ spectrometry

To verify the in situ responses of HPGe and the related software, ad hoc campaigns were carried out in areas with uniform levels of radioactivity, and not cultivated for many years. The results were compared to the exposure rate measured with ionization chambers and to the concentrations obtained from soil samples measured in laboratory. The agreement was quite good, as can be seen from table 3 and 4. Two campaigns were then performed to verify the response of the instrumentation for ISGS in different environmental conditions.

The areas selected for the campaigns were:

- Friuli-Venezia Giulia
- Alto Lazio

Friuli is the most affected Italian region by the Chernobyl fall-out. Therefore, we expected to find considerable amounts of cesium in the presence of generally low exposure rate due to limestone formations. In the alto Lazio we have a completely different situation: the cesium deposition was generally low in an area of volcanic origin with high background radiation levels from natural radioisotopes. The results are reported in Tab. 5 and Tab. 6.

4.2 Measurements on environmental samples

To examine any possible problem relating to in-situ utilization of the Spectran, three environmental samples were measured:

- agricultural soil
- coal ash
- granitic rock.

The samples were measured for 5000 secs. The measurement time was kept intentionally limited to verify the detection limits and because the time factor plays an important role with apparatuses purposely made for in-situ measurements. The results of the measurements performed on the three environmental samples are shown in Table 7. The data relating to ^{40}K and ^{137}Cs are given without any further processing, whereas the uranium and thorium concentrations are the weighted mean of the inverse square of the errors of the energies used for each family. In one-hour measurements, for unitary concentrations (Bq/kg) the following values were obtained: - 12 pulses for natural uranium

- 14 pulses for natural thorium
- 0.5 pulses for ^{40}K.

Therefore, with background concentrations (30 Bq/kg of U and Th, and 500 Bq/kg of ^{40}K), the one-hour measurements lead to statistical errors around 5%. Following the aforesaid method, for ^{137}Cs we obtain 9 pulses/h per Bq/kg. On the basis of the system detection efficiency, of the characteristic energies and emission intensities, we estimate the apparatus sensitivity for ^{131}I and ^{60}Co to be 15 and 6 pulses/h per Bq/kg, respectively.

5. POTENTIALITY AND LIMITATIONS

Some campaigns have been performed in extreme climatic conditions, on snow covered areas, at temperature below freezing point, to test the equipment. Some difficulties, at low temperatures, were experienced with the PC which, by specifications, should operate in the range 10-32 °C. In normal conditions it is possible to plan 3-4 measurements per day providing that each measuring point is at about one-hour drive distance. Sometimes it is difficult to find plane surfaces which are representatives of the contaminated area. Although the liquid nitrogen is widely distributed and can by purchased at least in all the Italian towns, we used a 25 liters dewar tank providing an autonomous capacity of 15 days. With regard to the required personnel, a trained graduate is necessary for the analysis and interpretation of the results. A minimun team of two operators is also needed to carry out a ISGS measure (to load and unload instrumentation, to fill dewar, to place the HPGe, etc).

6. CONCLUSIONS

ISGS is a suitable method to map the radioactive contaminations in a wide area following an accident and to guide emergency actions in the intermediate period. It can usefully substitute a campaign of sample collection and measure, mainly in regions far away from from central laboratory. Due to the complex instrumentation and the specialized operators required, it will be less effective in the initial period of the emergency.

REFERENCES

1. H.L. BECK.
The physics of environmental gamma radiation field.
The Natural Radiation Environment II, Houston 7.11/8-1972

2. H.L. BECK, J. DE CAMPO, C. GOGOLAK.
In situ Ge(Li) and Na(I) gamma-ray spectrometry.
HASL, sept. 1972.

3. L.R. ANSPAUGH et al.
The in-situ measurement of radionuclides in the environment with a Ge(Li) spectrometer. The Natural Radiation Environment II, Houston, 7-11/8-1972.

4. L. BRAMATI, C. MAFFEI
In situ high resolution gamma-ray spectrometry (part I).
EEC contract B16* -0277-I (A). Nuclear Safety Research.
Radiation Protection Programme. 1989.

TABLE 1

Characteristics of the calibraion sources and experimental results.

Nuclide	Energy (keV)	Gamma/sec	cps	Efficiency (cps/gamma/s)
Cd-109	88.0	232	2.8	0.012
Co-57	122.1	113	1.7	0.015
Ce-139	165.9	30	0.44	0.015
Sn-113	391.7	43	0.39	0.0090
Cs-137	661.6	2050	9.5	0.0046
Y-88	898.0	468	1.6	0.0034
Co-60	1173.2	2334	6.5	0.0027
Co-60	1332.5	2337	5.9	0.0025
Y-88	1836.0	500	0.98	0.0012

TABLE 2

ENVIRONMENTAL BACKGROUND (5000 sec)

PEAK ANALYSIS

Peak	Energy keV	FWHM keV	Net Area counts	Error %	Nuclides
1	511.19	2.2	73	19.5	Tl-208,Na-22,ANN
2	1461.05	1.8	117	9.9	K-40
3	1729.28	1.3	14	38.4	Bi-214
4	1764.66	2.2	20	28.3	Bi-214
5	2614.02	3.6	55	13.5	Tl-208

TABLE 3

Exposure rate
Comparative trials between ISGS and R&S ionization chamber (μR/h)

EXPOSURE RATE

Location	Naturals			Artificials		Cosmic Ray	ISGS + Cosmic R.	R & S	R&S/ISGS
	U	Th	40K	134Cs	137Cs				
CISE	1.7	2.5	1.8	1.0	1.4	3.6	12.1	11.4	0.94
ISPRA	1.4	2.3	2.1	1.7	2.4	3.8	13.8	13.0	0.94
TRINO	1.2	2.0	1.7	0.9	1.3	3.6	10.8	10.3	0.95
CAORSO	1.0	1.8	1.8	0.3	0.4	3.6	9.0	8.8	0.98
APRILIA	4.5	18.2	1.6	0.1	0.2	3.6	28.1	28.9	1.03
LATINA	1.8	3.8	2.1	0.04	0.2	3.6	11.5	13.0	1.13

TABLE 4

Concentrations in/on soil (Bq/kg or Bq/m2)
Comparative trials betweem ISGS and laboratory measurements

CONCENTRATIONS

Location		Naturals			Artificials		
		U (Bq/kg)	Th (Bq/kg)	40K (Bq/kg)	134Cs (Bq/m2)	137Cs (Bq/m2)	a (*) (cm)
CISE	ISGS	35	33	370	2300	8300	1
	LAB	38	36	410	2100	8300	
ISPRA	ISGS	29	31	430	3800	14700	1
	LAB	29	33	510	3400	11900	
TRINO	ISGS	25	27	350	2500	9900	2
	LAB	29	28	420	2600	11100	
CAORSO	ISGS	21	24	380	700	3300	2
	LAB	21	20	390	700	4000	
APRILIA	ISGS	91	240	330	190	2000	5
	LAB	47	270	420	---	1800	
LATINA	ISGS	37	50	430	240	3500	10
	LAB	23	51	530	---	3200	

(*) relaxation length

TABLE 5

Friuli campaign (18 - 20 oct. 1988)
Exposure rate and concentration in/on the soil, evaluated by ISGS

Location	EXPOSURE RATE (μr/h)							CONCENTRATIONS					
	Naturals			Artificials				Naturals			Artificials		
	U	Th	40K	106Rh	134Cs	137Cs	ISGS + Cosmic Ray	U (*)	Th (*)	40K (*)	106Rh (**)	Cs134 (**)	Cs137 (**)
Nespoledo	4.2	2.3	1.1	--	0.6	1.0	12.8	85	31	230	----	1600	7400
Prescudin	1.3	0.3	0.1	0.2	2.6	4.5	13.4	26	4	27	3900	6900	33200
Dandolo	6.7	0.6	0.3	--	1.5	2.6	15.5	140	7	69	----	4100	19100
Enemonzo	2.8	2.3	3.3	--	1.3	2.5	16.2	57	30	680	----	3500	18600
Tarvisio	1.1	1.7	1.1	0.2	2.5	4.4	15.6	23	22	220	3900	7700	37400
Tanamea	1.9	0.3	0.1	0.2	3.6	6.4	17.3	39	4	21	3800	9700	47400
Fiumicello	1.3	1.0	0.9	--	0.1	0.2	7.1	26	13	190	----	200	1500
Palazzolo	2.2	2.8	2.2	--	0.1	0.3	11.2	44	37	450	----	300	1900

(*)Bq/kg
(**)Bq/m2

TABLE 6

Alto Lazio campaign (31 jan. 1989)
Exposure rate and concentration in/on the soil evaluated by ISGS

Location	EXPOSURE RATE (μr/h)						CONCENTRATIONS					Th-on-134Cs
	U	Th	40K	134Cs	137Cs	ISGS + Cosmic Ray	U (*)	Th (*)	40K (*)	Cs134 (**)	Cs137 (**)	interference %
Vico Matrino	2.2	3.1	1.6	0.3	0.9	11.9	44	41	330	840	6800	20
Lago di Vico	6.1	12.1	4.0	0.8	1.5	28.4	120	160	830	2100	11000	27
Veiano	7.0	22.4	2.3	0.2	0.5	36.2	140	290	480	610	3900	70
Oriolo	9.7	23.8	2.2	0.1	0.4	40.2	200	310	450	360	2900	80
Anguillara	4.0	11.1	3.4	0.0	0.2	22.4	80	150	700	98	1200	90

(*) Bq/kg

(**) Bq/m2

TABLE 7

AVERAGE CONCENTRATIONS IN DIFFERENT SAMPLES (Bq/kg ± S.D.)

	GRANITE	SOIL	COAL-ASH
U	16 ± 1	28 ± 2	77 ± 3
Th	54 ± 1	30 ± 2	92 ± 3
K-40	691 ± 28	453 ± 32	62 ± 32
Cs-137	--- --	5 ± 1	--- --

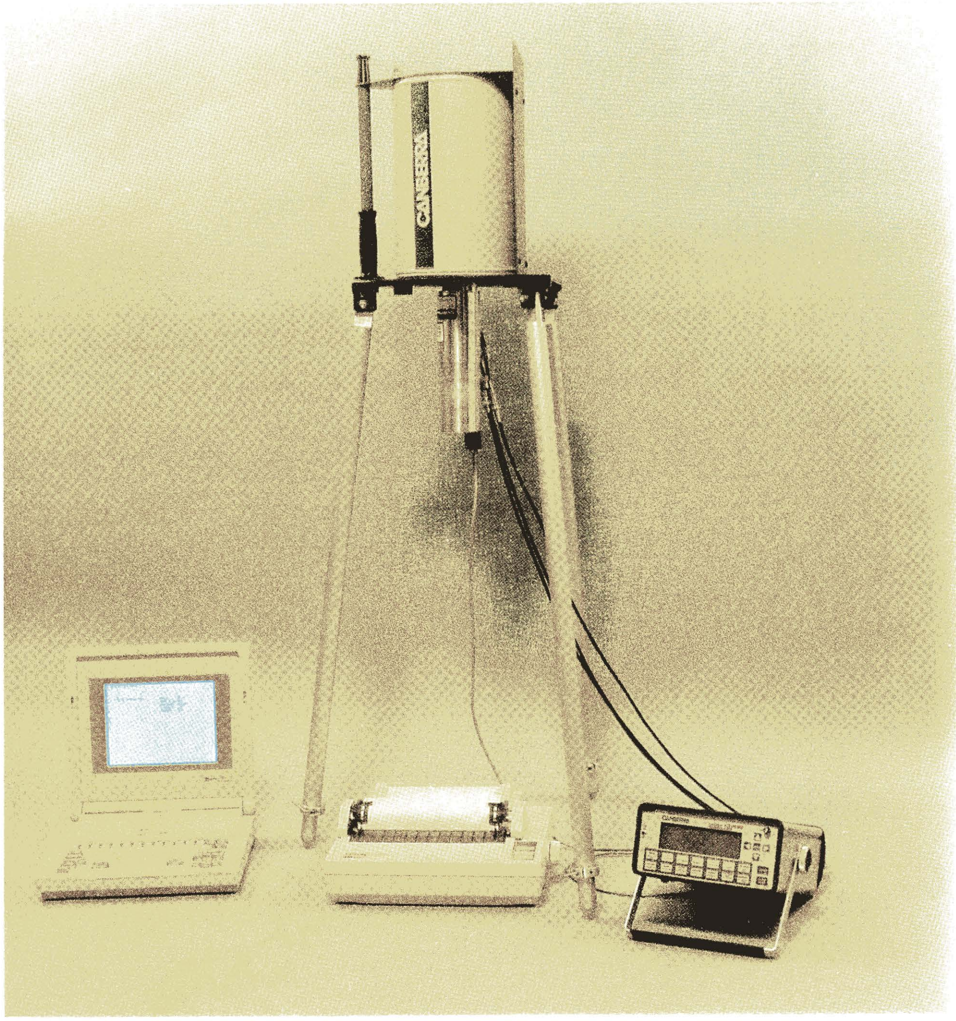

FIG.1

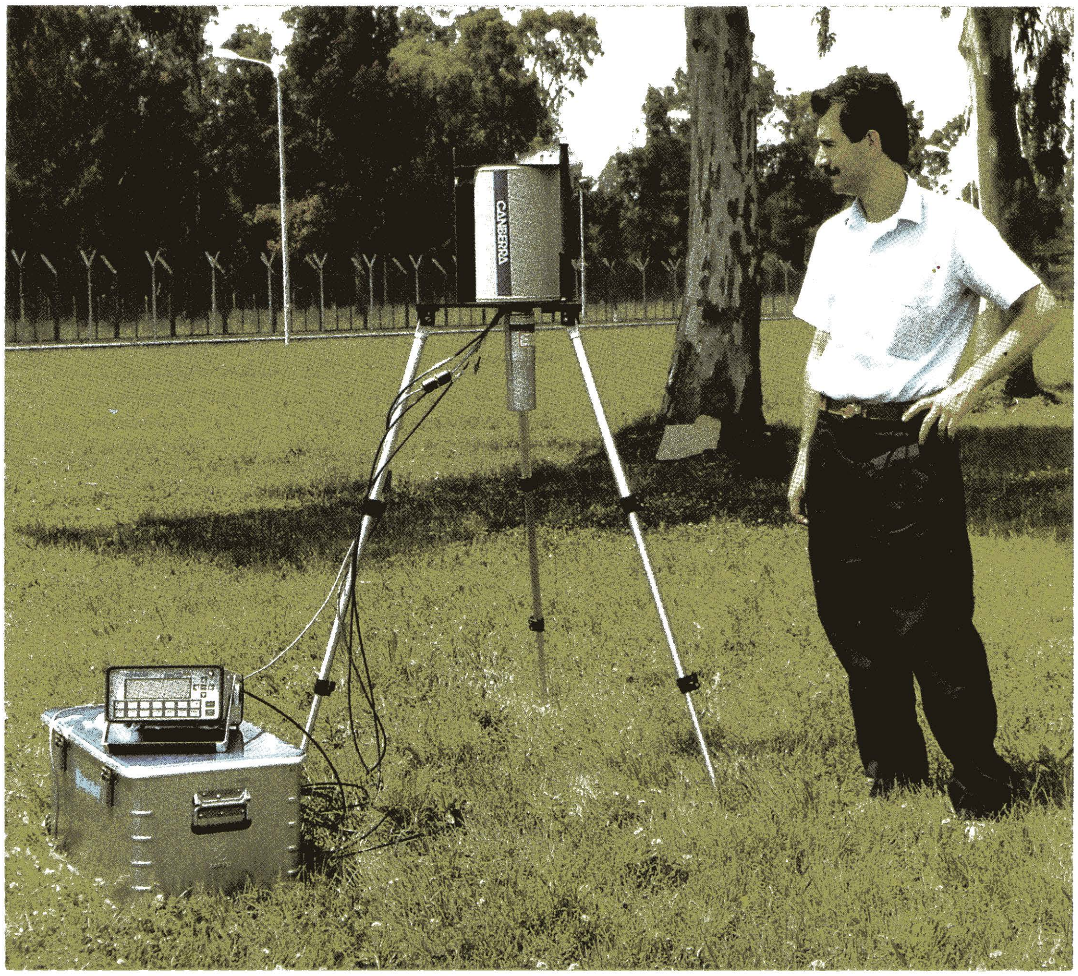

FIG.2

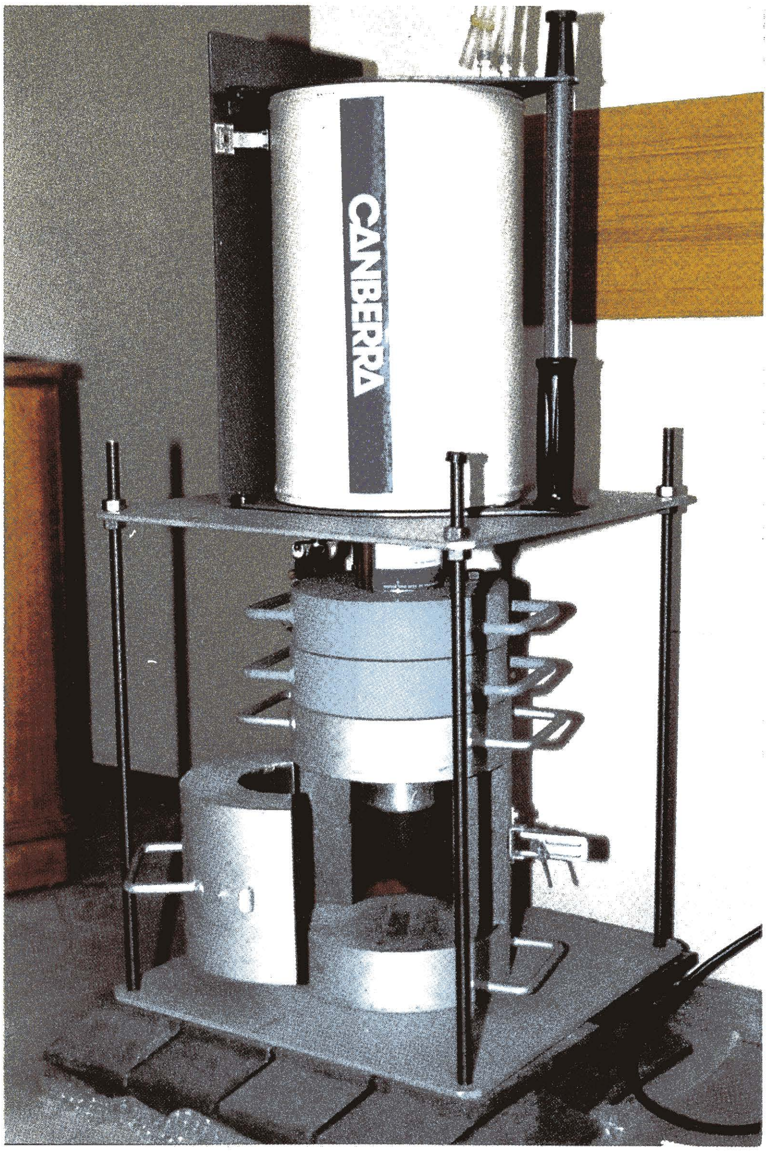

FIG.3

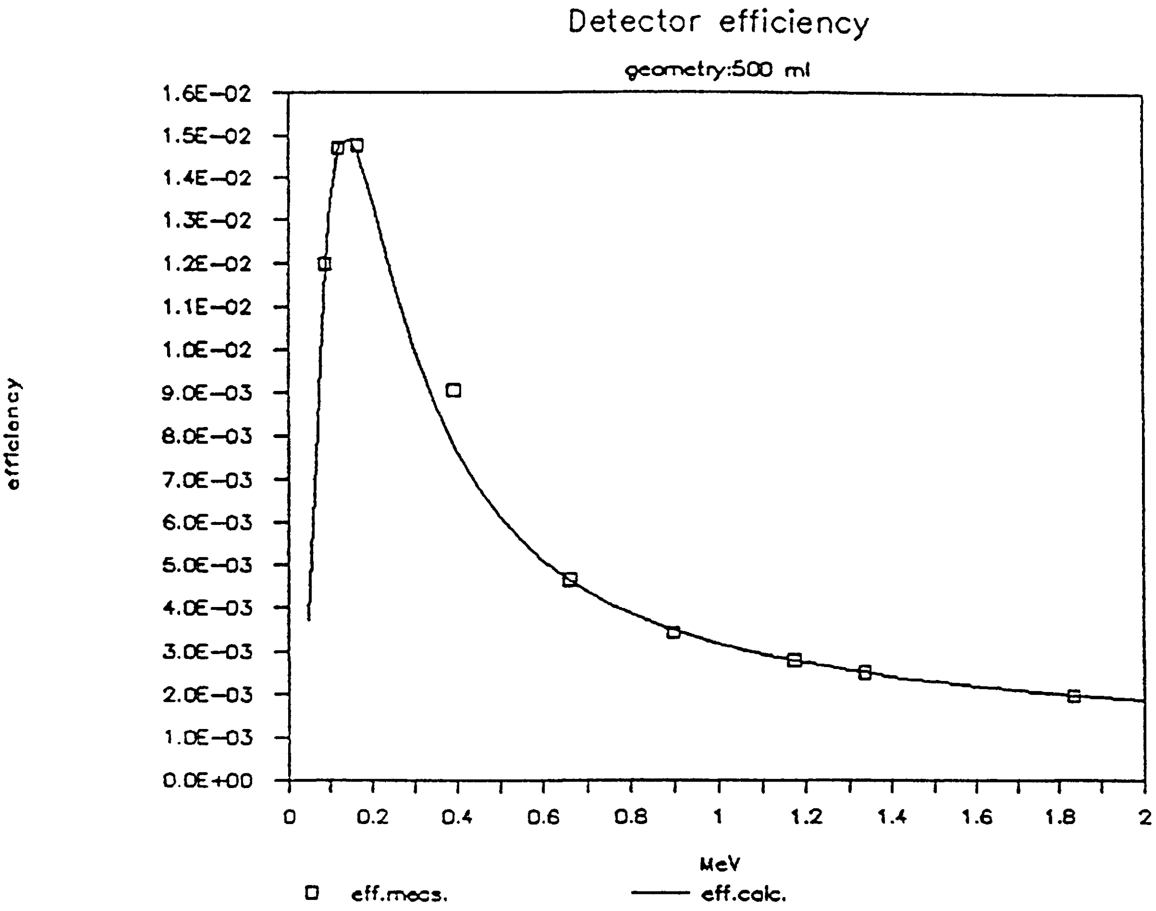
Detector efficiency
geometry:500 ml
efficiency
1.6E-02
1.5E-02
1.4E-02
1.3E-02
1.2E-02
1.1E-02
1.0E-02
9.0E-03
8.0E-03
7.0E-03
6.0E-03
5.0E-03
4.0E-03
3.0E-03
2.0E-03
1.0E-03
0.0E+00
0
0.2
0.4
0.6
0.8
1
1.2
1.4
1.6
1.8
2
MeV
□ eff.meas.
eff.calc.

FIG. 4

II. CONTRIBUTION TO THE OPTIMIZATION OF A NETWORK FOR MONITORING AND SURVEILLANCE OF ENVIRONMENTAL RADIOACTIVITY IN SPAIN

Prof. X.ORTEGA
Institut de Tècniques Energètiques
Universitat Politécnica de Catalunya
Barcelona - SPAIN

SUMMARY

The work plan we have been following involves initial action consisting of "sounding out" the situation of environmental radiological surveillance systems in the countries of the E.E.C. and the corresponding emergency systems. An analysis of the functioning of a regional network, has been undertaken using the centralized Catalan network around the two nuclear sites. The study covered an operational period corresponding to the years 1988 and 1989. The causes leading to the non-availability of the network and the influence of the differing localities, as well as of radiological incidents, were studied. The latter study enabled us to get to know the variations in exposure rates in the different localities together with the natural causes that led to them. In this respect, and for a better knowledge of the relationship between natural radioactivity and contaminating agents deposited in the soil, a calculation model was designed to determine the contribution to the environmental dose from the different radioactive components in the soil and this has been validated with data from the field along the Catalan coastline. In the studies of the technical features of the functioning of the equipment, our attention focused on the stations measuring the environmental exposure rate. In this respect, two techniques for calibrating environmental measuring equipment were experimented with, one in the lab and the other under field conditions. Finally pursuing the lines of the technological development of detection by means of ionization chambers, we have reached the end of the initial stage whose final aim is to develop a high-sensitivity chain with low-pressure ionization chambers. Our aim at a later stage is to contrast this with other commercially available equipment. To do this, the first stage consisted of developing a high-sensitivity, low-noise electrometer which has supplied good results under extreme temperature conditions.

INTRODUCTION

Reflections in the field of radiological surveillance in different European countries arising from the Chernobyl accident in 1986 appeared to impose common demands deriving from the awareness that a nuclear accident might extend its influence over vast distances with no respect for frontiers. These demands might take shape in the following manner:

1 - Extending environmental radiological surveillance plans and corresponding emergency action beyond the areas surrounding nuclear installations, which was where they were normally focused, in order to cover large geographical areas in these countries. These plans should involve collaboration procedures on an international scale.

2 - The setting up of a highly reliable on line functioning network for better and faster management of actions deriving from internal and external accident situations was considered highly advisable.

These demands derived from a double need, a technical one, in order to assist authorities with decision-making in emergency situations, and an informative one for the different bodies involved, thus making better and faster awareness of radiological events possible.

In 1986, environmental radiological control was limited in Spain to nuclear sites and their neighbouring areas of influence, to CIEMAT, and to certain other limited initiatives. After the Chernobyl accident, differing thrusts appeared between the aims of the Spanish central Safety Body, the "Consejo de Seguridad Nuclear"(C.S.N.), anxious, in the light of other experiences, to draw up a far-reaching plan that would prove reliable despite the limited economic resources available and certain autonomous administrations, particularly that of Catalonia, anxious to provide a rapid response to the widespread social concern which had revealed itself especially after the Chernobyl accident. The Catalan Autonomous Region covers 40,000 sq. kms. of the northeastern Iberian Peninsula, (Fig.2.1).In the southern part of its territory, near the mouth of the river Ebro in Tarragona, Catalonia has two nuclear sites with a total of 4 nuclear power stations and a total installed power capacity of 3320 Mwe. The mountainous area of the Pyrenees and the Mediterranean waters of the Golfe de Lyon separate them from neighboring France which, as is well known, is equipped with a large number of nuclear installations, particularly along the Rhone valley. The result of these diverse thrusts is the existence of a network, of a regional nature, which has had two years' experience, along with the recent launching of the REVIRA national plan.This situation has enabled us to take advantage of existing reality in the local Catalan situation in order to learn the required lessons for optimizing the design and management of an environmental network, while at the same time coming up with ideas and knowledge for further development.

1 - SOME CONSIDERATIONS ON THE PLANS FOR ENVIRONMENTAL RADIOACTIVE SURVEILLANCE IN EUROPEAN COUNTRIES

A survey was drawn up and sent to member countries of the EEC in order to evaluate the degree of reliability of environmental control mechanisms in operation in European countries at the time of the Chernobyl accident, as well as the later consequences for the new environmental measurement networks at both the planning and operational stages. This survey took in: a) structural features, b) features resulting from the impact of the Chernobyl accident, c) technical characteristics of the installation and d) features deriving from management.

Not all those consulted collaborated in supplying the data requested, although, to a greater or lesser degree, replies were obtained from the following countries: West Germany, the United Kingdom, Denmark, Holland, France, Belgium and Spain.

Generally speaking, the initial considerations drawn from this survey are as follows:

1) The environmental radioactive surveillance systems existing prior to May 1986 proved sufficiently sensitive to detect the first manifestations of the propagation of contaminants after the Chernobyl accident. The main symptoms of this presence were detected in the Research Centres or in nuclear power station sites - the locations where most environmental control mechanisms had been installed hitherto.

2) As a result of this incident, decisions were taken in almost all countries on the drawing up of surveillance plans on a national scale (IMS in Germany, TELERAD in Belgium, "Reseau de tele-surveillance" in France, RIMNET in the United Kingdom, the Dutch Radiation Monitoring Network in Holland, ARGOS in Denmark, REVIRA in Spain).

3) Most of these programs are at an advanced stage of implementation at the end of 1989.

4) The plans at present being undertaken are of a national character and practically no link-up is envisaged with other programs in neighboring countries.

5) Management structures in cases of emergency and their relationship with the environmental surveillance networks vary greatly from country to country. They depend to a large extent on the political and administrative organisation of each State and the responsibilities of the different public institutions.

6) Practically all the proposals provide for the setting up of on line operational stations, with centralized control of exposure rates and analysers of

activity in aerosols and of radioiodes. Calculating possible contaminants in soil and water is provided for at a second stage in the surveillance plans with non-immediate actions.

7) Some plans make use of a larger number of exposure rate detectors than analysers of environmental radioactivity. The exposure rate detectors are mostly composed of Geiger Müller counters, although in some cases ionization chambers are used. We have been unable to find evidence of unified criteria in defining the technical specifications of the equipment.

8) No coinciding criteria appear to exist to justify the location of the stations, nor do we have any knowledge of the existence of plans for calibration and control of the equipment.

9) There is a widespread tendency to associate all or part of the radioactivity measuring stations with meteorological stations in order to increase the information obtainable, with a view to forecasting the transport of contaminants.

10) Insufficient technical data has been obtained to compare the characteristics of the different equipment used, although from the replies obtained, a considerable diversification of commercial models seems apparent.

It would appear, on the basis of these reflections, that the national environmental radiological surveillance plans in European countries have responded to political and technical criteria on a limited regional basis and that, from the standpoint of European co-operation in this field, this fact may hinder short-term forecasts in large areas of atmospheric transport of contaminants.

2 - ANALYSIS OF THE FUNCTIONING OF THE REGIONAL NETWORK FOR ENVIRONMENTAL RADIOLOGICAL SURVEILLANCE IN CATALONIA.

The administrative authorities of the Catalan Autonomous Government, through the "Servei de Coordinació d'Activitats Radioactives de Catalunya" (SCAR), set up a surveillance network on a regional scale, taking in, first and foremost, its nuclear installations, and later on, other geographical areas of the Autonomous Region.(See Fig. 2.1).

Thus, a Network for Environmental Radiological Surveillance was drawn up, consisting of two types of stations - those already in place around the Nuclear Stations, and others to be distributed around different strategic points in Catalonia. Management of the network is of a centralized nature - it is linked to SCAR headquarters in Barcelona. The first sub-network around the power stations basically consists of exposure rate detectors, whereas the second, on a much wider regional scale, is composed of 8 stations measuring radioactivity in the atmosphere.

REGIONAL NETWORK FOR ENVIRONMENTAL RADIOLOGICAL SURVEILLANCE IN CATALONIA

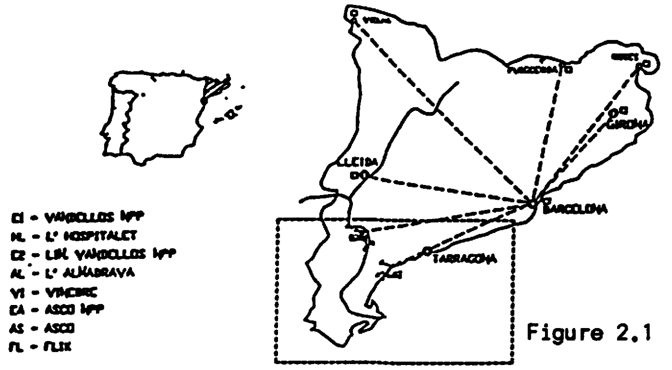

Figure 2.1

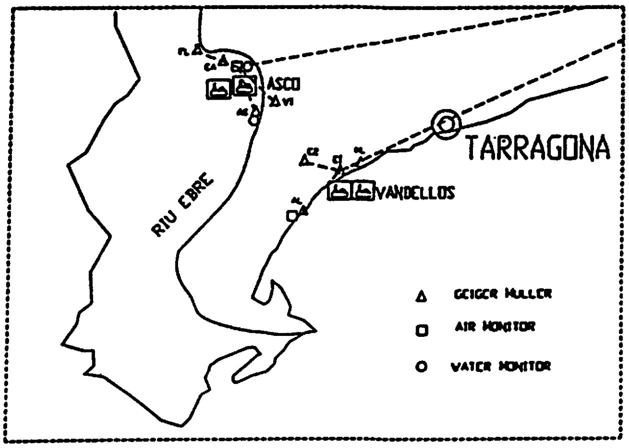

Figure 2.2

2.1. Environmental dose ratemeter stations around the Ascó and Vandellós Nuclear Power Plants

The network had already been blueprinted before April 1986, just before the Chernobyl incident. From November of the same year onwards, the first remote transmission of data tests started up and this is composed of a total of eight exposure rate detection monitors.

The initial project chose the siting of the stations in response to the situation of the existing nuclear power plants in Catalonia which are divided between two sites, those of Vandellós and Ascó (see Fig.2.2).

The Vandellós site is in a coastal location on the northern edge of the open area of the mouth of the Ebro river.

The Ascó site corresponds to the natural geographical region pertaining to the lowest stretch of the mean basin of the river Ebro, and is isolated from the Mediterranean sea by the presence of coastal ranges.

Each station in the network around the nuclear power stations has a monitor for measuring environmental radiation in terms of dose rate, covering an interval ranging from 0.01 microSv/h to 100 mSv/h. This wide interval is covered with two attached Geiger Müller-type probes. Each station has an uninterrupted 0.250 kVA power source which guarantees a supply autonomy of the order of 24 hours as well as a device for avoiding important overloading of the supply which might affect the equipment. For the information transmission, a "point to point"-type data transmission telegraphic line has been used, which is connected to each detector and a "Base" computer on each site. This centralizes information from all the data coming in from the stations situated in each one of them. The information coming in from each Base computer arrives on a line of similar nature in the SCAR Headquarters in Barcelona, where the Control computer is located. The lines used are telegraphic and transfer information at a speed of 50 Bd., considered sufficient for the transmission of radiological data.

The communications system is in real time and permits each detector a minimum consultation interval of three minutes. This may vary as a result of requirements or special preferential attention required by a particular location. At the moment, this time is set at six minutes for the Surveillance Network and one hour for the Overall Network.

2.2 -Study of the functioning of the surveillance network around the Ascó and Vandellós Nuclear Power Plants

The study contemplated here corresponds to the analysis of the functioning of the eight stations for detection of exposure rates located in the Ascó and Vandellós sites over a period of 24 months corresponding to the whole of 1988 and 1989.

The study of the network's functioning is based on the records supplied by SCAR , the network manager, and the observations made on incidents obtained from its technical personnel.

Detailed study of the records, made with an interval of fifteen minutes from each of the eight stations, has prompted us to divide this study into two well-defined parts. On the one hand, in the study of the availability of the network, an attempt is made to quantify this for each station, site and as a function of the time factor. On the other, in the radiological study of the network, an analysis is carried out, based on calculations of exposure rates, of the situations which have led to increases clearly above mean values.

TABLE 2.1. % OF HOURS OF INTERRUPTION PER YEAR ACCORDING TO TYPE OF INCIDENT AND FOR EACH STATION IN THE RESPECTIVE SITE.

	STATION	TYPE 1	TYPE 2	TYPE 3	TYPE 4	UNAVAIL*	AVAIL**
VANDELLOS 1988	E1	10.7	1.2	0.3	9.1	21.3	78.7
	HL	1.6	1.4	20.9	10.1	34	66
	E2	12.3	1.4	0.3	4.7	18.7	81.3
	AL	11.3	1.4	0.3	12.6	25.6	74.4
1989	E1	4.7	1.6	0	5.3	11.5	88.5
	HL	3.4	1.6	14.7	4.9	24.6	75.4
	E2	6.3	1.6	0	3.6	16.6	83.4
	AL	12.6	1.6	0	5.9	20.1	79.9
ASCO 1988	VI	12.1	1.4	0.3	5.4	19.2	80.8
	EA	5.5	1.4	0.3	3.2	10.4	89.6
	AS	6.7	1.4	0.3	4.7	13.1	86.9
	FL	6.7	1.4	0.3	2	10.4	89.6
1989	VI	1	1.6	0	14.5	17	83
	EA	1.8	1.6	0	7	8.7	91.3
	AS	1	1.6	0	6.6	8.3	91.7
	FL	1.6	1.6	0	10.4	13	87

* % of hours unavailable per year in each site.
** % of hours available per year in each site.

VANDELLOS		ASCO	
E1	Vandellós NPP.	VI	Vinebre.
HL	Hospitalet de l'Infant.	EA	Ascó NPP.
E2	Limits Vandellós NPP.	AS	Ascó.
AL	L'Almadrava.	FL	Flix.

2.2.1 Availability of the network

The study of the incidents occurring during the functioning of the network was based above all on analysis of the possible causes of the interruptions occasioned in the functioning of the eight stations measuring environmental exposure rates. The causes attributable to the different interruptions are very diverse and not always well known. Based on available information, the different types of incidents were divided into four groups.

- TYPE 1 Incidents. (Transmissions)

In this block we include those that affected data transmission from the stations to SCAR Headquarters in Barcelona.

- TYPE 2 Incidents (Software)

Here we situate the incidents attributable to errors in the software used in network control.

- TYPE 3 Incidents (Planned)

This type groups together the interruptions occasioned in a pre-planned way which were caused by maintenance, repair or testing operations.

- TYPE 4 Incidents (Non-catalogued)

This group includes all those interruptions whose cause was uncertain. In some cases they may even be due to one of the above causes, but there is no certainty as to this.

- By analising the results of the availability of the network it is observed that the latter is greater in the Ascó site than in that of Vandellós. In the former, average availability per station works out at about 85% in 1988 an reaches 89% in 1989. In Vandellós, on the other hand, it was of the order of 75% in 1988 and went up the following year to 82% These results reflect an improvement in 1989 over the previous year.
- The results from the classification of incidents, indicate that the largest percentage of these are situated in the TYPE 4 Incidents groups (Non-identifiable). This group, in principle, contains all those interruptions which prove difficult to classify. However, after consultation with SCAR technical personnel, we may be certain that between 60% and 70% of them were due to breakdowns in the data transmission telegraphic lines (TYPE 1).

The reason for the high proportion of this type of breakdown is to be found in the layout of the telecommunications lines in that particular geographical area. In order for the implementation of the network not to be excessively costly, already existing transmission lines were used whose infrastructure is prevailingly rural, and this has proved to be insufficiently reliable, as well as vulnerable to the surrounding environment.

- TYPE 1 and 4 incidents (communications and non-catalogued) were more frequent in the wettest months in the two sites, April and November, although more data would need to be available to calculate seasonal variations in network incidents more precisely.
- Interruptions due to incidents with the software protocols (TYPE 2) were more frequent in 1989 than in 1988. This was due to a problem in the software which began in 1988, whose consequences were more important from February 1989 onwards, coinciding with the fact that SCAR began the collection of data from the stations distributed around various points in the whole region of Catalonia.
- TYPE 3 incidents, which totalled 5.2% of average monthly hours of interruption in 1988, were not relevant in 1989. Improvements in exploitation of the network meant important intervention on the equipment side was unnecessary.
- In the study of simultaneous interruptions in the stations in each nuclear site, it is interesting to verify that there were many more interruptions in isolated equipment in Vandellós than in Ascó, most of them attributable to local breakdowns in the data transmission lines.

It is also verified that le least frequent simultaneous interruption is that affecting three stations. This is logical, bearing in mind the design of each site, made up of four stations, one of which is the site "base".

- The difference between the two sites as regards the significance of the interruptions is attributable, on the one hand, to the fact that the layouts of the telegraphic lines are much more vulnerable in the case of Vandellós than in Ascó, and, on the other, that the location of the sites also determines differences in climatological conditions, particularly for rainfall, which makes Vandellós more vulnerable.

Radiological Study

Based on the data for dose rates supplied by the different stations, it can be appreciated that on particular occasions there are periods of variable duration when the dose rate has increased appreciably. A study analysing the causes and quantifying the increases observed in the two sites was undertaken. To do this, the mean value was calculated, as well as the standard deviation of the dose rate corresponding to a 6-day interval prior to the perturbation, and the increase in dose rate has been quantified in percentage terms with respect to this mean.

Altogether, throughout the twenty four months studied, eight situations that were considered abnormal were recorded with regard to the dose rate values, four corresponding to 1988 (January, March, April and November) and four to 1989 (April, September, October and November). Situations were considered abnormal when in one or other of the stations values were recorded for the exposure rate whose difference with regard to the mean was (3σ) above the distribution of measurements throughout the six days prior to the perturbation, σ being the standard deviation.

When an abnormal situation arose, the behaviour of the eight stations in the two sites was analysed in order to compare the existence of correlations of a meteorological nature. Periods with radiological incidents were detected, particularly in the Vandellós site. The increases in the dose rate in percentage terms with respect to the monthly mean were very important - over three times above the results obtained during a six-day interval around the perturbation in all the cases presented.

There were three particularly significant situations in the Vandellós site:

- November 1988. The increases in the dose rate were over 25% with respect to the mean in all the stations and in three of these (E1, HL, E2) the increase topped 34%.
- April 1989. The increases in dose rate for two of these topped 20%, and a 25% figure was also reached.
- September 1989. During this month the increases in dose rate in Vandellós were over 43% in two stations

(HL,E2).

After analysing the meteorological parameters corresponding to these two periods, supplied by the weather station in the Vandellós power plant, an evident correlation was observed between the variations in rainfall and the increases in dose rate, with a certain delay between the latter and the former which could be quantified at between one and two hours.

- The Ascó site did not display such important radiological incidents affecting the whole site. By analysing the meteorological parameters in each zone, supplied by the weather station in the Ascó power plant, it was observed that in these periods the amount of rainfall was in all cases much less than that recorded in Vandellós and in some cases nil (March 1988).

The follow up carried out allows us to draw a series of overall conclusions which, although they refer to a network with very particular characteristics and location, provide significant information with regard to the overall behaviour of this type of environmental control network.

1. There is an evident relationship between the siting of a particular station and its availability, due to the importance of the meteorological parameters and their correlation with the incidents in the functioning of the network. This relationship could be more acutely felt in nuclear sites which by being located in areas distant from more populated zones have less reliable telecommunications network equipment.
2. Local meteorological conditions, particularly rainfall, are determining factors for the radiation levels considered normal for a particular site. It is necessary for a period of tests to be set in motion that will enable us to carry out follow up of normal radiological incidents, from which the levels of intervention for anomalous radiological situations can be established.
3. These considerations are applicable to the atmospheric radioactivity measurement stations, whose functioning is foreseeably more delicate.

3 - CONTRIBUTION TO ENVIRONMENTAL EXPOSURE MADE BY NATURAL AND MAN-MADE RADIOISOTOPES DISTRIBUTED IN THE SOIL

Follow up and interpretation of environmental radiological data, both under normal conditions and in cases of the presence of artificial radioactive contaminants, requires close knowledge of the different components present in the dose. These depend on the locations in which the measurement systems are housed. The natural environmental radiation field may be superimposed by the one caused by artificial radioisotopes.

A study has been undertaken of the radioactive components present on beaches along the Catalan coastline. A model has been designed for calculating the contribution to the environmental dose made by the radioactivity of the soil and this model has been validated through dosimetric measurements in the field.

As regards the variations in environmental doses, there are several responsible causes: changes in the cosmic radiation flow affecting the earth's surface, which for a given location are always below 10%, variations in the concentrations of Rn and its decay products in the atmosphere occasioned by changes in atmospheric variables, and variations in dose rates caused by the radioelements in the soil. The latter constitutes the main cause of the temporary changes observed in environmental dose levels.

The detection mechanisms employed in the Environmental Radiological Surveillance Plans are able to record the variations in the dose rates due to natural sources which, in turn, superimpose themselves on the variations caused by the presence of radioelements of an artificial origin, when they exist. It is therefore important to find and differentiate between the contributions from the different components of the environmental radiation field.

The study performed may be divided into two parts:

- The development of a model for evaluating dose rates caused by the natural and artificial radioelements present in the soil.
- The study of the natural and artificial radioelement contents of the beaches on the Catalan shoreline and evaluation of the dose rates they give rise to.

3.1 - Description of the dose calculation model

The calculation model for the doses caused by ground nuclides described as follows enables us to evaluate the contribution to the total absorbed dose rate in the atmosphere at one metre above ground level, due to gamma radiation, from each one of the radioelements present in the soil. This allows us to learn and separate the contribution due to the radioelements of an artificial origin from that corresponding to natural radionuclides.

In general, it cannot be assured that the distribution of the different natural and artificial radioisotopes in the soil remains constant with varying depths. In order to bear this fact in mind, the soil was divided into compartments of a particular thickness, in each one of which it is supposed that the radioelements are uniformly distributed. The compartments chosen are displayed as follows:

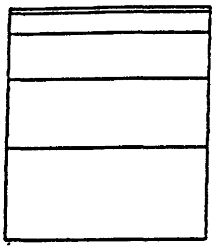

COMPARTMENT	DEPTH
A	0-5 CM
B	5-15 CM
C	15-30 CM
D	30-50 CM
E	50-80 CM

Subsequently, based on the dose factors calculated by other authors, the dose rate conversion factors were calculated for the horizontal strips indicated in the previous figure. The contribution from each one of the segments to the total absorbed dose rate one metre above the ground is calculated through the model developed. The basic data is made up of the concentrations of the different radionuclides in each segment. These concentrations are usually calculated by Gamma Spectroscopy techniques.

In order to carry out a check on the validity of the model developed,a pressurized ionization chamber was used. Due to the fact that the effectiveness of this instrument, varies in relation to the energy of the photons involved, it is most important to know the gamma radiation spectrum inciding on the detector in order to estimate with precision the real dose rates that take place in a particular area.

For this reason the model developed incorporates a sub-routine for estimating the spectrum corresponding to each one of the photons emitted for each one of the radioelements present in the soil.

The model calculates the exposure rate the detector should record, based on the radiation spectrum corresponding to each one of the photons emitted by the ground radioelements, the curve of effectiveness of the detector in relation to the energy from the photons inciding on it and from the concentrations of radionuclides present on the ground. The estimated value is checked against the exposure rate actually detected by the ionization chamber.

3.2 Experimental checking of the model

A check on the reliability of the dose calculation model presented was undertaken at five points distributed along the Catalan coast. Several sand samples were collected on each one of the beaches for analysis by means of gamma spectroscopy. The samples were collected at various points on the surface, as well as in each one of the compartments outlined by the model.

In a parallel way, experimental determinations on the dose rates were made on each one of the beaches with a Reuter & Stokes ionization chamber.

TABLE 3.2

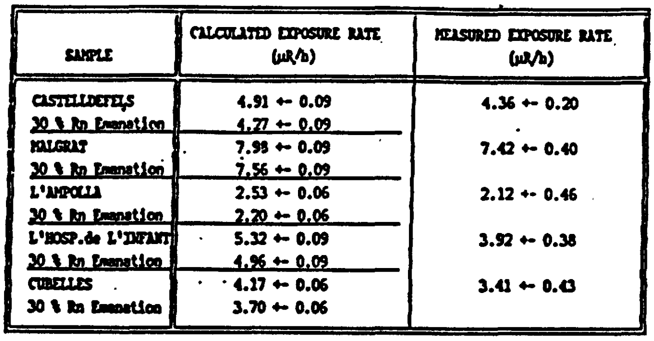

SAMPLE	CALCULATED EXPOSURE RATE (μR/h)	MEASURED EXPOSURE RATE (μR/h)
CASTELLDEFELS	4.91 +- 0.09	4.36 +- 0.20
30 % Rn Emanation	4.77 +- 0.09	
MALGRAT	7.98 +- 0.09	7.42 +- 0.40
30 % Rn Emanation	7.56 +- 0.09	
L'AMPOLLA	2.53 +- 0.06	2.12 +- 0.46
30 % Rn Emanation	2.20 +- 0.06	
L'HOSP.de L'INFANT	5.32 +- 0.09	3.92 +- 0.38
30 % Rn Emanation	4.96 +- 0.09	
CUBELLES	4.17 +- 0.06	3.41 +- 0.43
30 % Rn Emanation	3.70 +- 0.06	

The exposure rates which ought to be recorded by the ionization chamber were calculated from the concentrations of the different radioelements detected in the analyses by gamma spectroscopy and by making use of the model developed. Table 3.2 displays the results obtained and also indicates the estimated exposure rates if there is a 30% emanating power of Radon and Thoron.

Good correlation is observed between the values calculated with the model and experimental results.

RESULTS

- Large variations were observed in the specific activities of K^{40} as well as the Radioactive series of uranium and thorium along the Catalan coast. The mean values, as well as the extreme concentrations which were calculated in the present study are summarized in the following table:

		Mean Value (Bq/Kg)	Maximum Value (Bq/Kg)	Minimum Value (Bq/Kg)
	K^{40}	624	1299	136
Serie U^{238}:	Ra^{226}	10.3	18.5	4.7
Serie Th^{232}:	Ra^{228}	14.7	44.4	4.7
	Ra^{224}	16.2	53.7	5.3
	Tl^{208}	5.3	16.8	1.8

- The calculation of the absorbed dose rates along the Catalan coast has revealed that, in general, the K^{40} contributes to a major degree to the dose rate corresponding to the majority of the samples studied. Likewise, the contribution of the thorium series is always higher than that of the uranium series. Moreover, the contribution of the artificial radionuclides, Cs^{137} mainly, is minimal in comparison with the contribution made by the natural components.

- On the average, cosmic radiation contributed 43.2% (276 µGy/y) of the total absorbed dose rate on the Catalan coast, whose mean value was 661 µGy/y. The remainder (56.8%, 385 µGy/y) is distributed as follows:

K^{40}	36.1 %
Series Th^{232}	14.2 %
Series U^{238}	6.4 %
Cs^{137}	0.09 %
Others..............	0.01 %

4 - DEVELOPMENT OF CALIBRATION TECHNIQUES FOR ENVIRONMENTAL EXPOSURE RATES MONITORING.

Commercially available equipment for measurement of exposure rates usually has calibration certificates enabling us to know a priori its suitability for environmental measuring. Despite this, the measurements on which these certificates are based correspond to laboratory conditions that do not correctly reproduce field conditions. One concern of this work has been to correlate laboratory experiments with the natural radiation field which, as has been indicated above, has a complex composition.

In order to achieve these aims, our work follows two guidelines as regards techniques. The first consists of using well-known photon radiation beams enabling us to obtain exposure rates of the order of environmental ones, with different energies. In addition, a TLD dosimetric system was set in motion, enabling us to obtain good sensitivity and effective control of fading , in order to study in the field the problems relating to the anisotropy of the field and its energy spectrum.

4.1 Development of a calibration protocol in the laboratory

A calibration protocol was experimented in the laboratory in order to calibrate the monitors used in the environmental radiological surveillance networks, in particular the Catalan network analysed previously. Since, this equipment is designed to measure the natural background and its fluctuations, its calibration presents specific characteristics and greater demands than for most radiation meters.

Two types of commercially available environmental radiation measuring equipment were calibrated, one was an ionization chamber with high pressure gas, and the other a Geiger Muller detector, belonging to the Regional environmental network analysed. The calibration took place with the sources of ^{137}Cs of 74 . 10^6 Bq and ^{241}Am of 74 . 10^8 Bq. It is displayed in fig. 4.1 the polar response on the horizontal plane.

Figure 4.1. Polar response to radiation of two commercial radiation monitors.

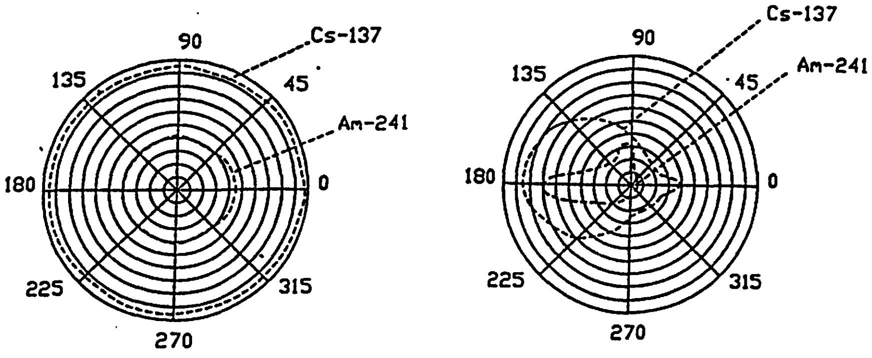

a) Ionization chamber equipment

b) Geiger probe equipment

The measurements displayed reveal significant anisotropy in the Geiger probe detection system, which increases as the inciding radiation energy decreases.This anisotropy translates, in practice, into an underestimation of the mean dose. This problem decreases considerably if the Geiger probe is removed from the protective box. This latter geometry is more symmetrical and eliminates the absorption of the inciding beam in the other components contained in the box. The spherical geometry of the detection system with the ionization chamber allows us to achieve a practically isotropic response to the radiation.

For low energies (60 keV), both systems display low efficiency (44%). In the case of the Geiger probe detector, this efficiency substantially increases (78%) when the probe is removed from the protective box.

4.2 - Environmental radioactivity measurement using thermoluminiscent dosemeters.

This work, in progress, has been divided into two stages: in the initial stage we proceeded to optimize a thermoluminescent dosemetric system enabling us to evaluate the environmental dose levels and minimize the influence of changeable atmospheric conditions; the second stage aims to analyse the influence of the energy spectrum of environmental radiation on the response from the detectors and to estimate a factor that evaluates angular and energy response from the TLD detector.The methodology proposed can be summarised in the fig. 4.2.1 and 4.2.2.

Figure 4.2 - Block diagram for measuring direct radiation by TL dosemeters (5)

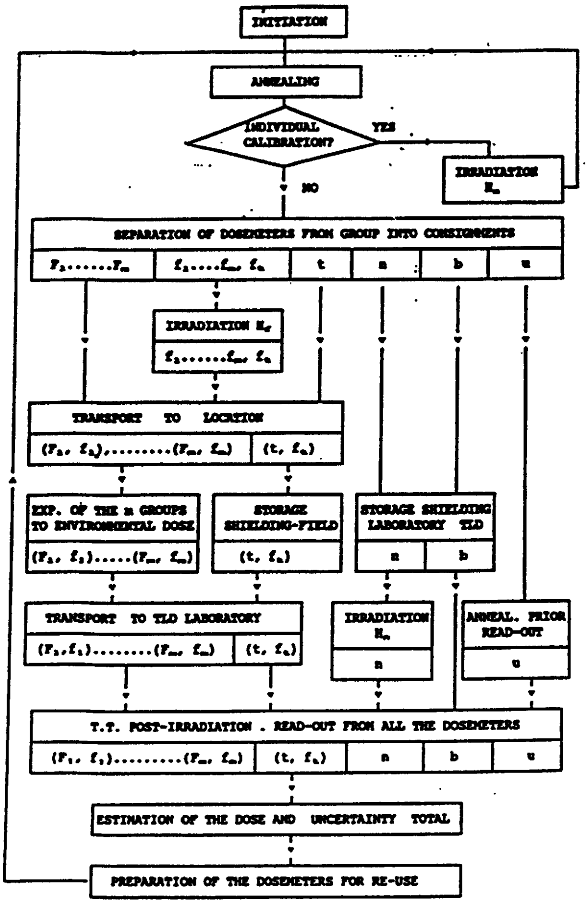

Figure 4.3 - Protocol for thermal treatments for termoluminiscent material. (After (1))

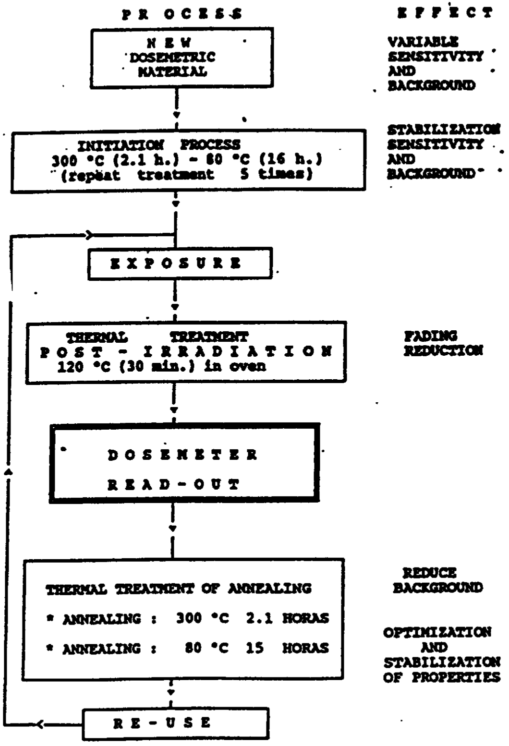

5 - DEVELOPMENT OF A NEW ELECTROMETER FOR USE IN MEASURING ENVIRONMENTAL RADIOACTIVITY.

The study of the reliability and consistency of the indications for the monitors habitually used in environmental radiological surveillance programs,brought us to develop a new electrometer to equip the monitors that would serve as reference. This electrometer, in fixed installations, ought to make possible the eventual use of low pressure chambers in which the thickness of the wall would not hamper measurement of the low gamma component of the field and, in portable monitors, the use of high pressure chambers of reduced size in order to have lighter and more manageable instruments.

An analysis of the present state of the art of very low intensity current electrometry reveals that one of the basic elements to be borne in mind if we aim to obtain precise results with systems for measuring very low intensity currents is:

- the systematic errors introduced by the real characteristics of the components forming the basic circuits
- the random statistical errors caused by the nature of the current detected and the measuring process employed.

A systematic examination of the different causes of error and the elaboration of the corresponding predictive models for the systems with an electrometric amplifier, brought out that the charge collection current integrator systems (C.C.C.I.S.) with two comparators and initial conditions (the diagram principle for these systems is shown in figure 5.1) are the ones that offer the best qualities.

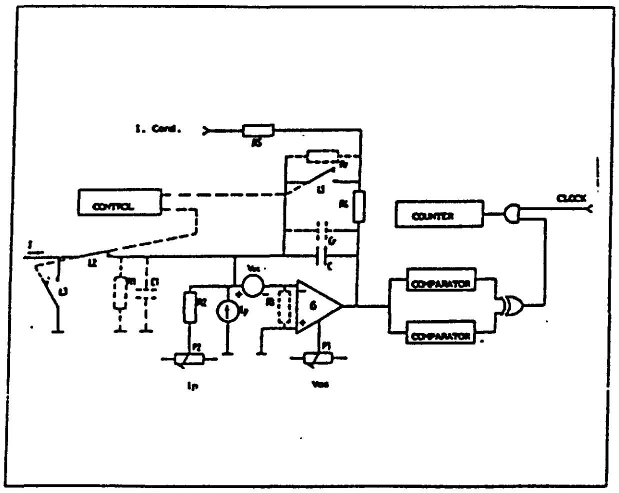

Fig. 5.1 Basic circuitry for an integrator of the current with constant charge collection, two comparators and initial conditions.

5.1. The basic circuitry of the electrometer developed

The diagram of the basic circuitry of the electrometer developed appears in figure 5.2. The main contributions of this circuitry compared to that of figure 5.1 are:

1. Incorporation of a device that enables us to calculate the error current through a suitable measuring process we shall describe later.
2. It includes another L4 switch which remains off during measurements and thus connects to mass the L1 switch terminal.
3. As in these systems it is not strictly necessary for $V_{os} = 0$, because with suitable choice of initial conditions the error that V_{os} introduces in the origin is eliminated, we can do without the R2 resistence from the compensation system of Ip.

As regards the integration condenser and the one providing the Ic current, together with the ramp generator, these were the same. They must have a very high leakage resistence and as stable a capacitance as possible, which can be calculated either through careful calibration or else directly by geometrical considerations.

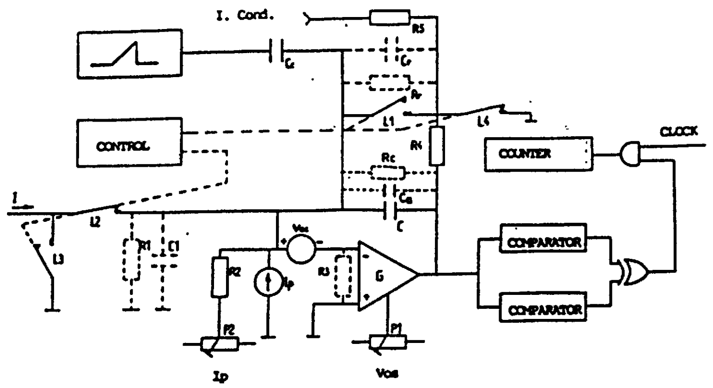

Fig.5.2 The basic circuitry of the electrometer developed.

These conditioning factors were fulfilled by designing a cylindrical condenser with air dielectric and a guard ring structure eliminating the leakage current between the electrodes of the condenser.

A lengthwise section of the condenser, in which the structure of this element can be seen, appears in figure 5.3.

Its capacitance can be calculated geometrically with a precision of over one per thousand.

These results show that both the tolerance and the temperature coefficient are at least one order of magnitude smaller than the values that characterize high value resistences.

The measuring process consists basically of two stage:

- during the first stage, the integration condenser integrates the total current formed by the measurement current I and the error current If, and the time δt taken by the system to pass from the threshold of the first comparator to that of the second is measured.
- during the second stage which begins when the Ic current, of sign opposed to that for measurement, is injected into the system, the total current that will produce the discharge of the integration condenser is Ic + If. The time δt' is measured.

5.2 <u>Experiments aimed at checking the instrument's response</u>

The electrometer was subjected to a measurement checking process under very diverse conditions as regards the temperature inside the instrument, ranging from measurements at ambient temperature to measurements under extreme conditions with intervals of sharp thermal gradients.

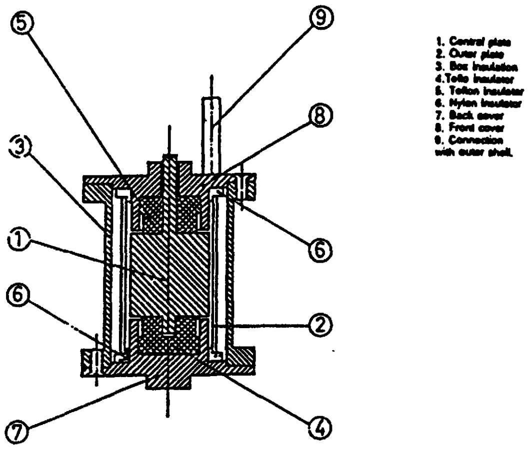

Fig. 5.3 Lengthwise section of the integration capacitor.

The main aim of the plan of experiments designed was to calculate with what degree of precision the unit designed could measure currents of the order of the fA.

In order to obtain this current, a ramp generator and the calibration condenser were used. The capacitance of this generator was evaluated, by geometrical considerations, at 10.5194 pF and that the slope of the ramp generator was I mV/s, the intensity of the current supplied by the whole could be estimated at 10.5194 fA.

5.3 Results

a) Measurements at ambient temperature

At a temperature of 25°C, which inside the electrometer corresponded to a temperature that remained steady between 25.7°C and 26 °C, the following results were obtained:

$$I = (10.5188 \pm 0.0099)\text{fA} \qquad I_f = (-0.3789 \pm 0.0063)\text{fA}$$

in which the first term of the second member of these equalities is the mean value, and the second is the typical deviation corresponding to a series of ten read-outs. This result represents a relative error of the order of 0.0054% in the measurement of intensity I .

b) Measurements at variable temperature

Series of read-outs were made at different temperatures between 14 °C and 50 °C under very diverse conditions, and in some of these series with variations that represented sharp thermal gradients.

The overall result reflecting 70 read-outs corresponding to 85 effective hours of measurement under very varied ambient conditions was:

10.4740 ± 0.0495 fA

where the first term is the mean of the different means and the second the typical deviation of this mean. The relative error was 0.43% .

REFERENCES

- FORTUNY, J., BATALLA, E., MASALLES, I."Las redes de vigilancia radiológica ambiental en tiempo real de Catalunya".
- Asociación Nuclear de Vandellós. Central Nuclear de Vandellós II. 1976. "Estudio preliminar de Seguridad". Vol. 1
- Fuerzas Eléctricas de Catalunya, S.A. Central Nuclear de Ascó I. "Estudio final de Seguridad". Vol. 1
KOCHER, D.C. and SJOREEN, A.L. Dose rate Conversion Factors for external exposure to photon emitters insoil. Health Physics, Vol. 48, 2 pp. 193-205, 1985
MINATO, S. Terretrial Gamma-Radiation Field in Natural Environment. Journal of Nuclear Science and Technology, 8 (6).
BECK, H.L.; MILLER, M.; Temporal variations of the Natural Radiation Field. Second Special Symposium on Natural Radiation Environment, Bombay, India, 19-23 June, 1981. Wiley Eastern Limited, Published by: Vohra, Mishra, Pillai and Sadasivan, 1982, pp. 163-172.
UNITED NATIONS. Sources, effects and risks of ionizing radiation. United Nations Scientific Committee on the Effects of Atomic Radiation. 1988 Report to the General Assemby, with annexes.
MARTIN MATARRANZ, J.L., MARTIN CALVARRO, J.L., LOPEZ, G., BUTRAGUEÑO, J.L. "Proyecto de la red nacional de vigilancia radiológica ambiental"

III. DEVELOPMENT OF MOBILE UNITS FOR EMERGENCY ACTION IN CASE OF NUCLEAR ACCIDENT

P. PELLERIN, J. P. MORONI

SCRPI , Le Vasinet (F)

Aim of the contratct

The french legislation and regulations give to the Minister in charge of the Public Health and of the Workers, a prominent responsibility in nuclear field : the responsibility to guaranty, in regard of the population and of the workers, that the development and the use of this form of energy could not be a menace for public and professional hygiene.

Prevention and control are the bases of this action, but they shall be completed by the conception, the realisation and the maintenance of a system able to alert in case of accident, and to perform measurements on the field.

The role of the SCPRI has been developed, since it's origin, on these two complementary levels. When the Chernobyl accident occured, the SCPRI was asked to send on the place one of it's mobile laboratories; it became evident, due to the difficulties encountered locally to assess the environnemental and human contamination, and the efficiency and flexibility of the mobile unit lend by the SCPRI, that such mobile laboratories were well fitted to the action in case of accident; the idea of the french authorities to develop, improve and test these units was thus reinforced.

It was the object of the present contract with the EEC.

The aim was the development of mobile gamma spectrometry units, simple, standard and fiable, able to perform, on the field, in particularly difficult conditions created by the nuclear accident, controls of large amounts of populations (internal contamination by gamma emitters) or environnemental assessments (liquid as well as solid samples) in large number; this implies a great robustness of the materials, of the procedures, of the computer codes. This excludes too much sophistication, the aim being the efficiency.

In addition, it has to be noted that these units have been planed with the idea of possible intervention not only into french territory, but in other countries, and mainly into EEC countries.

Scheme of action in case of accident

To be able to well understand the role of mobile spectrometric units in case of accident, it is necessary to have a look on the scheme of the action in case of nuclear accident.

The duty of the SCPRI, precised by the french regulations, aims to :

- coordinate, since the moment the alert is given, the several teams performing measurements on the field
- assess the radioactivity of the environnement and of men
- gather and pool all this information, and draw maps of ambient exposure, of airborne activity, of soil and food contamination
- on this basis, evaluate the sanitary situation and select the accurate counter-measures to be applied by the authorities.

The time-sequence of such actions way be defined as follows :

1) The first measurements concern the external exposure to the plume, against which prompt sheltering may be effective. Of course, the earliest data on external exposure to a plume are given by plume diffusion codes, which are immediately run by the SCPRI, as soon as the term-source is known. But these are theoretical results, which shall be confirmed, as soon as possible, by real measurements.

   To do so, the french regulation imposes to the owner of the power-plant to be able to put immediately into action at least two mobile units, to check the dose rates, at the vicinity of the plant.

   The data gathered in this way will complete the data given by the fix stations of ambiant gamma ray doses, four of which are set at 1 km around the plant, in four directions selected according to the main wind directions; the other four are located at five kilometers of the power-plant, in the same directions.

2) Very rapidely too, surface contamination measurements can be made. This implies, nonetheless, counting devices; a first set of measurements may be done using total gamma or beta counting. But it is convenient to rapidely complete these crude estimations, by spectrometric analyses.

3) Air monitoring implies the collect of aerosols on filters or charcoal cartidges. This is permanently done by the fix installations above mentionned; it is, thus, easy to have quick information with mobile units able to rapidely circle around the power-plant, collect the samples and make a five minutes count.In addition to that, the mobile units embark vacuum devices able to collect more filters and cartidges on the field.

4) These measurements enable the sanitory authority to evaluate the situation and to decide if early countermeasures are necessary. These countermeasures are : evacuation, home sheltering, distribution of stable iodine pellets.

Speaking of countermeasures, it is important to bear in mind that they may include adverse effects, which might in some cases be severe; thus, one shall resist to the temptation to take remedial action as a reflex response in accident situations. On this point, the ICRP is clear :

"unless a limit would to be exceeded by a considerable amount, the risk "would still be sufficiently low as not to warrant such countermeasures as "would themselves involve significant risk or undue cost" (ICRP PUB 26 and PUB 40).

It is, consequently, absolutely necessary to have good evaluations of the real situation in regard of possible immediate exposure (essentially external), and as far as possible on subsequent delayed exposure (essentially internal), to decide remedial action. This implies several measurements on the field; one may not rely only on diffusion computer codes; these, in fact, act only as guide to plan measurements. The need of well equiped, prompt to be put into action mobile units, is thus evident.

5) The early stage of the accident being over, it does not mean that there is no more need of measurements, on the contrary.

To confirm the early remedial actions, taking into account that home sheltering can hardly last more than 24 hours, to plane relocation when needed, it is necessary to caraterize more precisely the environnemental contamination. This requires a great lot of analyses.

At this stage the sanitary authorities shall also provide clear information about food consumption, which also is a matter of sample measurements.

And, finally, one shall be able to perform lots of body burden measurements. Sheltered and evacuated people shall be measured; people living in the zone near to the evacuated area shall be measured. But there will probably be an even greater demand of measurements for psychological reasons. It is essential to be able to tranquillize people, since worried people may have unpredictible reactions which may drive to adverse consequences.

6) The final phase of post-accidental actions, the phase of recovery, needs also an important lot of measurements, as for example to check decontaminated areas.

A versatile spectrometry unit.

Before the Chernobyl accident occured, the SCPRI developed a first model of a double gamma spectrometry unit. This unit was intended to equip the railroad wagon which was built by the SCPRI and the SNCF (french railroad national company) at the demand of Mme Veil in the name of Europa.

This wagon has been achieved in 1986. But the use of this basic spectrometric unit, initially called "Gemini-gamma" since it associates two gamma spectrometric units, has not been restrited to the railroad car.

It has also been used on microcars and, finally, as fix units which now are the standard material for gamma spectrometry in the medical services of the french power plants. We shall describe these different uses.

In the meantime, the initial version, Gemini gamma, was modified to take in account the feedback of experience gained, and particularly in USSR where it has been widely used, as we shall see below, after the Chernobyl accident. After having been called "Super Gemini", it is nowadays the "Super Gemini 90" version.

This unit is basically a double spectrometric seat, of the shadow shield type. Two seats and the corresponding detectors are associated in a single unit, linked by a single metallic column as support of the detectors (see fig. 1).

The detectors are sodium iodide crystals. One, of 3 inches x 3 inches, is located in front of the chest of the person. The second detector, of 2 inches x 1 inch, is intended for the measurement of the thyroid activity. The detectors are protected by antimony-lead alloy shields; the first one, conic in shape, allows the detector to "see" a zone corresponding to the lungs and the stomach. The second detector, shielded by a cylindric tube, is adjustable to fit the neck of the person, in front of the thyroid gland.

The seats are shielded with 5 cm of antimony-lead alloy, in all directions covering the angle of aperture of the two detectors shieldings.

In the "Supergemini 90" version, the column supporting the 4 detectors is mobile vertically, and both seats are independantly mobile along an horizontal line. Moreover, the cushion of the seats may be removed, to permit the installation of a little strecher across the seat. These features are intended to do a very versatile tool of this basic unit. In it's most common use, the unit is intended to measure the chest and the thyroid activities. The choice of the thyroid, as we shall see later, is evident. As for the chest and stomach region, it covers both routes of possible entry of the contamination in case of accident (if one excepts wounds, which obviously would constitue a particular case, which can be dealth with easily with this unit if necessary). So, the most common use of this spectrometers is intended to check airborne or digestive contamination, two routes to look at in case of a nuclear accident.

But the mobility of the column along the vertical axis and the possibility to rotate of 90 degrees in both senses the detectors and their shields also alows to inspect other parts of the body when necessary. If, as an example, one is willing to inspect a part of the body mainly composed of muscle, it is easy to rotate the shield of the 3 x 3 inches crystal so as to let the crystal face down, and locate it on the thighs of the person.

A not uncommon case which occurs in little contamination incidents is the ingestion (or inhalation with consecutive ingestion) of small activities of insoluble metallic oxydes (cobalt 58 mainly) which goes through the gastrointestinal fract without being absorbed; in such cases, it is possible to follow the migration along the GI tract, using the 2 x 1 inch probe; the crystal being, in this case, at the extremity of the cylindrical shield, may comme in close contact with the abdomen, and the location of the hot particle may be precised.

Primarily intended for human spectrometry, this device has been adapted for sample counting; many geometries can be adopted; a 5 liters conic funnel able to contain soil, grass, food, milk..., can be fitted to the shield of the 3 x 3 inches probe, in normal position, the funnel taking the place of the chest of the person. But the probe may as well be rotated face up, to put on the 3 x 3 inches crystal a cylindric 1 liter flask, for quick urinalyses for exemple. In this case, a lead lid of 5 cm covers the sample. (Fig 2)

The multichannel analyser used is the "serie 35+" Canberra, 4096 channels. The data are collected by an Amstrad 6128 computer (128 k bytes of central memory, plus 360 k bytes floppy disk). This unit is intended to output results, without any help of external computing; but, when very large amount of people is being monitored, as it happened in USSR with the microcar which was lent to the soviet sanitary authorities, it may be usefull to just collect rough data on floppy disks, and use an external device (possibly another microcomputer of the same type, or a larger one if statistical processing or mass storage is intended) for final processing.

For emergency measurement, it is sufficient to use 200 channels for each probe; energy calibration is made on the basis of 10 kev per channel, the normal explored range being 100 kev - 2 MeV. The counting time may be easily reducted to 5 minutes. This being so, the whole process lasts less than 10 minutes, including processing and printing time. Therefore it is possible to check 24 persons per hour in a microcar Master equiped with 4 seats (2 units), 72 persons per hour in the trailer (see description below) and 192 persons per hour in the railroad carriage equiped with 32 seats.

With such a counting time, the measurement threshold obtained for common gamma emitters is rather good. For 137 Cs it is of 1500 becquerels for the chest region (corresponding to 4500 becquerels for the whole body). This represents a small fraction of the correspondant Annual Limit Intake (for ingestion : 4 000 000 becquerels for workers, 400 000 Bq for population). For 131 Iodine, the situation is similar, the measurement threshold for thyroid being 200 becquerels when ALI for ingestion is 1 000 000 Bq for workers and 100 000 for public. It has to be noted that what we intended as "measurement threshold" is the lower limit of activity that gives a counting precision of not less than 20% with a confidence level of 95%. If we consider, as it is a rather common use, a result exposed as activity ± two sigma, then the threshold becames five times lower (900 Bq for 137 Cs for example).

The efficiency of these units is, then, very good for emergency measurements, even if the counting time is reduced to 5 minutes. Of course, this result has been obtained in normal background conditions, and it is clear that in case of accident the background will be higher. But the thresholds are sufficiently low to allow reasonable increases in the background without impairing dangerousely the quality of the results, especially when we bear in mind the fact that it is only the square root of the background total counts which influences the counting precision.

The mobile units.

1) The tiniest of the mobile units of the SCPRI using Gemini gamma is a microcar "Master 1500" Renault; the effective carrying capacity is 600 kg, with a maximal speed of 130 km/h; according to the french regulations, the driving licence for the cars is sufficient to drive it. The Master is equiped with 4 seats (2 Gemini gamma), one multichannel analyzer and one microcomputer. 24 persons or samples may be monitored per hour. The experience gained up to now proves that a total of 400 persons or samples may be monitored par day, providing technicians staff way interchange during the day.

   The electrical supply may be provided by :

   - public network when available
   - batteries (10 hours autonomy)
   - generating set (a portable set using gazoline)

   The Masters are linked one-another and to the headquarters also, with high-frequency radiotelephones. Two technicians are needed to run this mobile unit. (Fig 3 and 4)

2) The semi-trailer lorries.

   The SCPRI has equiped two 20 tons semi-trailers; one of them is loaded with 4 strecher-type total body units, and is out of the scope of this paper. The other one includes 12 seats (6 Super-Gemini), plus a radiochemistry and a photographic dosimetry laboratory. It's capacity may be raised up to 1500 samples or persons monitored per day. (Fig 5 and 6)

3) The railroad coach.

   This coach has a length of 24,5 meters, a width of 3 meters, and a carrying capacity of 18 tons. It's technical features (bogies, brakes...) enables it to be inserted in a 200 km par hour train . It includes a 70 kVA generator for electrical autonomy. (Fig 7 and 8)

It is equiped with 32 seats (16 Gemini-gamma units), that is 64 crystal probes; 4 multichannel analyzers and 4 microcomputeurs are linked to the seats. This modular formula is mainly intended to avoid complete shut-down of the couting capacity in case of electronical defect.

The alley in the middle of the coach is large enough to admit more spectrometric units to be added. The floor has been provided with mechanical parts enabling the set-up of up to 16 more seats; But the most common use of this empty place is the addition of one or two sophisticated spectrometric units (as for example germanium detector units) according to the necessity of the intervention.

About 10 people are needded tu run properly this lot of spectrometric units, which may provide up to 5000 examens per day. Of course, such a large-scale screening supposes an additional organization :

- Preparation of the people being monitored (name and address, changing clothes if necessary...)
- Treatment and storage of results.

The SCPRI works in close contact with the specialists of the DSC (Civilian Security Department) for this purpose and, among other decisions, a second railroad coach has been buyed and will be equiped jointly, to serve as a necessary extention of spectrometric railroad coach.

4) Up to now, the SCPRI possesses :

- 7 microcars Master
- 2 trailers
- 1 railroad coach.

This enables a total of CIRCA 12000 measurements per day.

In addition, the SCPRI has already built 4 more Master microcars :

- 1 for the medical service of the CEA (Atomic Energy Commission)
- 1 for the military sanitary service
- 2 for the sanitary authorities of the CMIR (Mobile radiologic intervention groups) of the DSC (cf supra).

There are 16 CMIR in France (and it is foreseen to goup to 25); one more CMIR is being equiped at this moment by the SCPRI; the other ones will also be equiped, according to a medium-term program.

One may now foresee that, in a not far future, the french territory will be covered with units able to react promptly in case of nuclear accident, and it will become possible that large-SCALE screening could be initiated within one two hours after an accident.

Experience gained in intervention field.

1) When the Chernobyl accident occured, the french sanitary authorities proposed to USSR sanitary authorities to lend them a mobile unit to monitor people on a large scale around the power plant. There was the possible choice between the railroad coach and the microcar. The advantage of the railroad coach was the number of seats, allowing 5000 exams per day. But there were two inconvenients for use in USSR; the first was the gauge of railway track, which is larger in USSR than in Europe; the second was in fact the major inconvenient, since the track gauge problem may be solved : it was the fact that the railroad network is not very compact in USSR . It is more easy to go anywhere, in villages, with a microcar than with a railroad coach. For these reasons, the USSR sanitary authorities choosed to borrow the microcar.

The 25th of february 1987, the microcar Master Gemini number 01 was embarked on a soviet cargo sailing to Riga. The experience lasted about one year, and several tens of thousand people have been monitored.

Of course, this first use in a real situation was of great interest for us. The mobile laboratory proved to be easy to run, flexible and robust (in conditions of roads and climate, more severe than in our countries). The experience lead to many improvements, as well on the material himself (it was the first version of Gemini, modified since, according to the experience) as on the procedures.

One major point in this trip was to avoid contamination of the material, with it's consequence of alteration of the background. Many precautions were taken, as for example the use of removable paint for somme external parts of the car. They proved to be effective, since the contamination was very low when the car returned in our laboratories, and there has not be difficulties in interpreting spectra due to high background.

Another experience is being conducted at this moment. The first of july of 1990, another Master Gemini microcar was sent by road in Ukrain and Bielorussia, under the sponsorship of IAEA, to run around making measurements until the 15th of september 1990.

In addition, France gave two fix Super Gemini installations to the local sanitary authorities, in Ukrain and in Belorussia.

All this constitutes a very interesting source of feedback informations to improve the material as well as the methods. But, as it is the case when one is confronted with large scale operations in real conditions, where one may not discard part of the parameters like in exercises, things are not simple and gatheing usefull information is a rather time-consuming work.

2) This does nevertheless not prevent us making exercises. French authorities organises at least one large scale exercise every year. These exercises concern power plants or other nuclear installations, where are supposed to occur important accidents implying the release of large quantities of radioelements.

The last exercise was in june this year, on the power plant of Belleville-sur-Loire. The SCPRI sent on the field the railroad coach, one of the lorries and one of the Master Gemini microcars. One of the CMIR of the civil Safety Department (DSC) sent also one their Master Gemini microcars which, as we said above, are absolutely identical to the SCPRI ones.

Since organisms others than the SCPRI uses Master Gemini microcars, built by the SCPRI (DSC, CEA, Armies), the SCPRI provides a periodic training of the staffs from these external organisms. Training courses includes 15 days of theoretical and pratical training on the Master Gemini spectrometric units, and also on all the problems which may occur when running a loboratory microcar.

3) Gemini an Supergemini units are now widely used in France, as well on mobile units as on fix installations. Let us remind that every power plant's medical service is now equiped with Super-Gemini spectrometric units; all medical services have more than one installations, and the number of installations in service is constantly increasing.

Fortunately, real internal contaminations are very rare in french power plants. This good situation has the disadvantage to provide scarce occasions to intercompare materials on body burden evaluation. But, due to the low measurement threshold of the Super Gemini, improved by the fact that in routine situations the counting time may be increased up to, reasonably, 30 minutes, intercomparisons are possible on a routine basis. They involve, apart from the Super Gemini, more sophisticated installations, like the 100 tons steel room of our laboratory .

Calibrations are done with phantoms. Our service has developed a technique allowing to incorporate radioelements on rubber foam, thus making phantoms of various sizes and densities.

The experience gained in the Chernobyl accident teached us that, among the many radioelements one may find in a reactor core, few have an operational interest in case of accident. Speaking of radioelements, and on an overall point-of-vue, four situations may be distinguished in monitoring :

- the atmospheric military tests accustomed us to deal with the isotopes of iodine, cesium, strontium, zirconium, ruthenium, baryum and so on

- the monitoring of workers in medical and research field implies a very wide range of isotopes

- the routine monitoring of power plants workers leads to find more frequently minor activities of activation products as 58 and 60 Co, 54 Mn, 51 Cr and so on, than fission products.

- the Chernobyl accident could have let believe, at first look, that the situation would have been similar to the atmospheric tests situation; in fact, it was very different, since a bomb volatilizes and spreads allover all the fission products, when in a reactor accident, the only fission products being released are the one which have the lowest fusion temperature.

As it could be verified, fission products with high fusion temperatures like strontium 90, represented a very low percentage of total activity, if one excepts the very close vicinity of the reactor. The isotopes measured in France with a percentage higher than 1% of the total activity are :

99 Mo, 103 Ru, 106 Ru, 129 Te, 132 Te, 131 I, 134 Cs, 136 Cs, 137 Cs and 140 Ba.

Of these isotopes, two only are of real interest on the sanitary point of vue: 131 Iodine since it is able to deliver high thyroid doses within the first days, and 137 Cs since it is the remaining contaminant after some years and for long time.

It is evident that in accident circumstances, large scale screenings suppose that one knows the relevant isotopes and has adapted the computer code to it; this task has been completed, as far as possible due to the present data. Improvements are, of course, still possible.

Conclusion.

One thing is sure : we can put into action now many mobile units, as well for the french territory than for whole Europe, in cas of nuclear accident. The units exist, more are under construction, and they have been tested under real conditions in the Chernobyl region. This is a very positive result.

Much works has still to be done. The feedback of the USSR experience with the Gemini-Gamma will keep coming; it shall be interpreted, improvements shall be foreseen, then experienced.

This is our task for future.

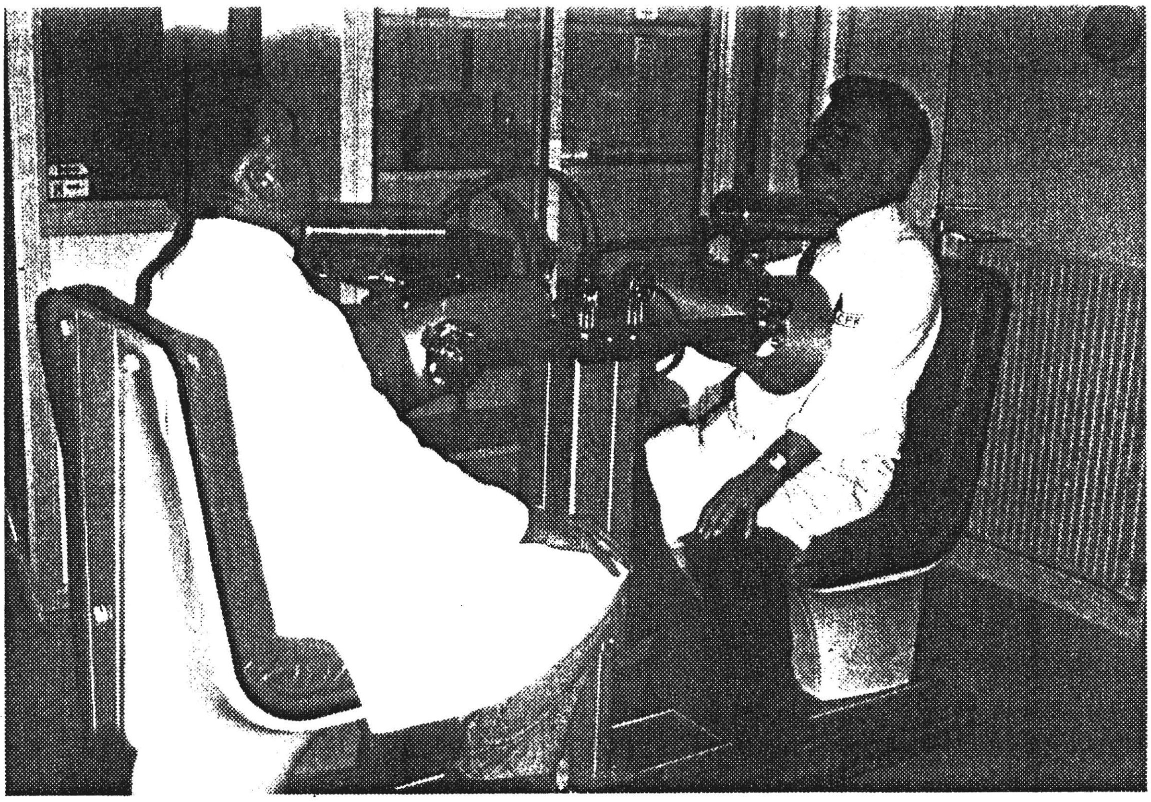

Fig.1 - The Supergemini gamma used for bodyburden evaluation

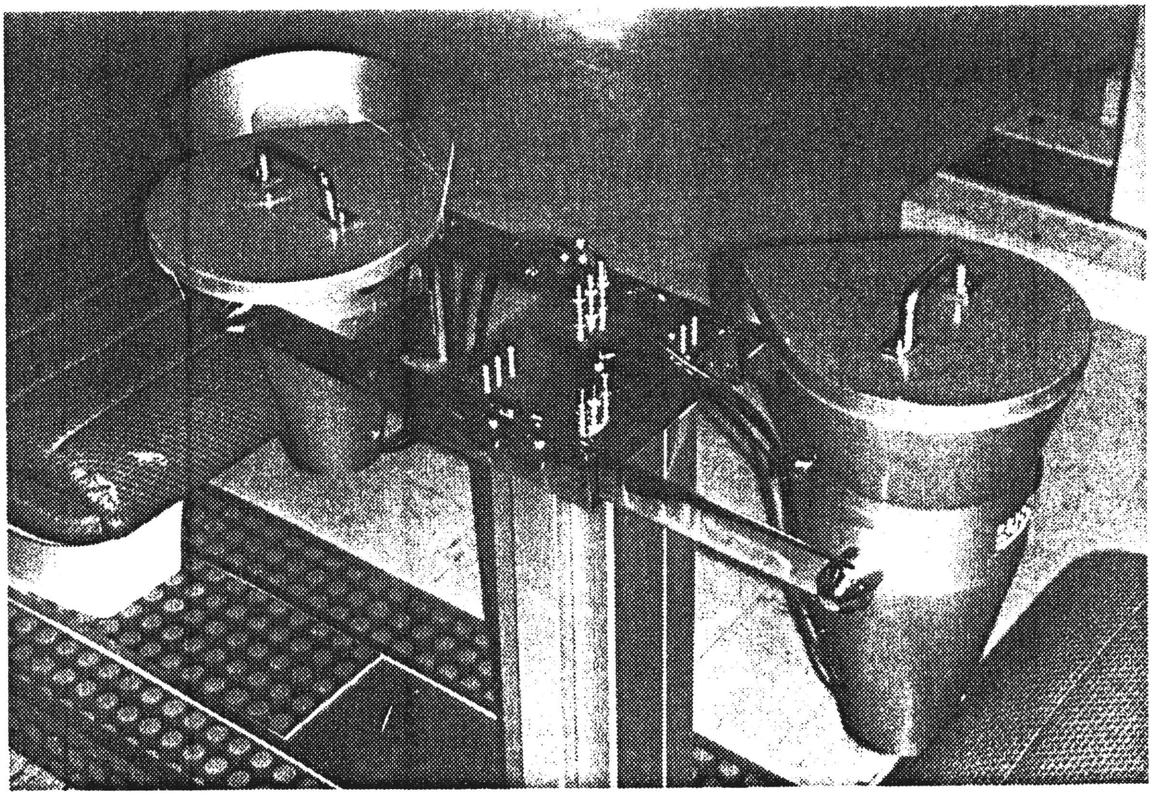

Fig.2 - The Supergemini gamma used for sample measurements

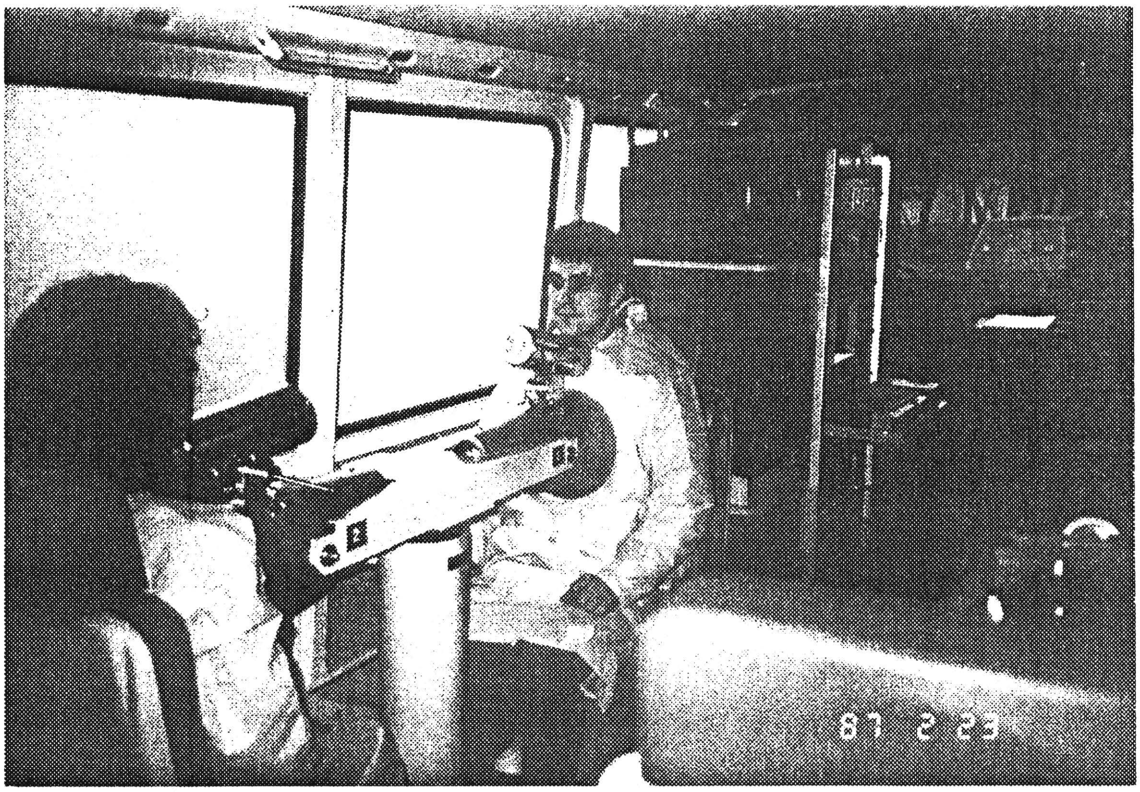

Fig.3 - View of the Gemini gamma into action in a Master microcar

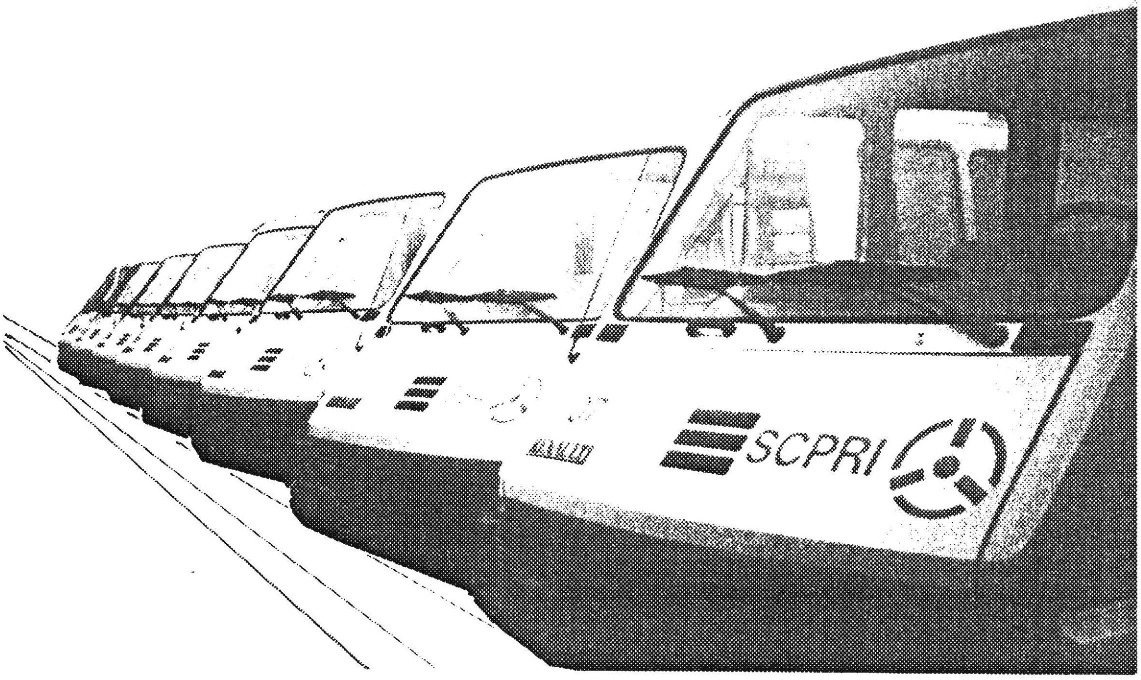

Fig.4 - An impressive lot of microcars ready to be put into action

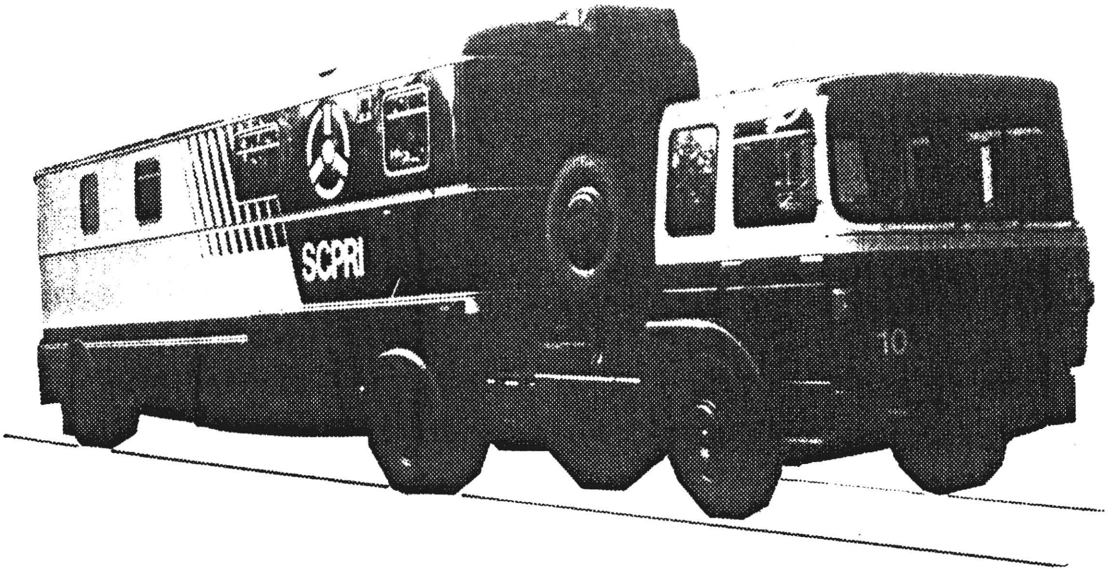

Fig.5 - External view of the 20 tons lorry

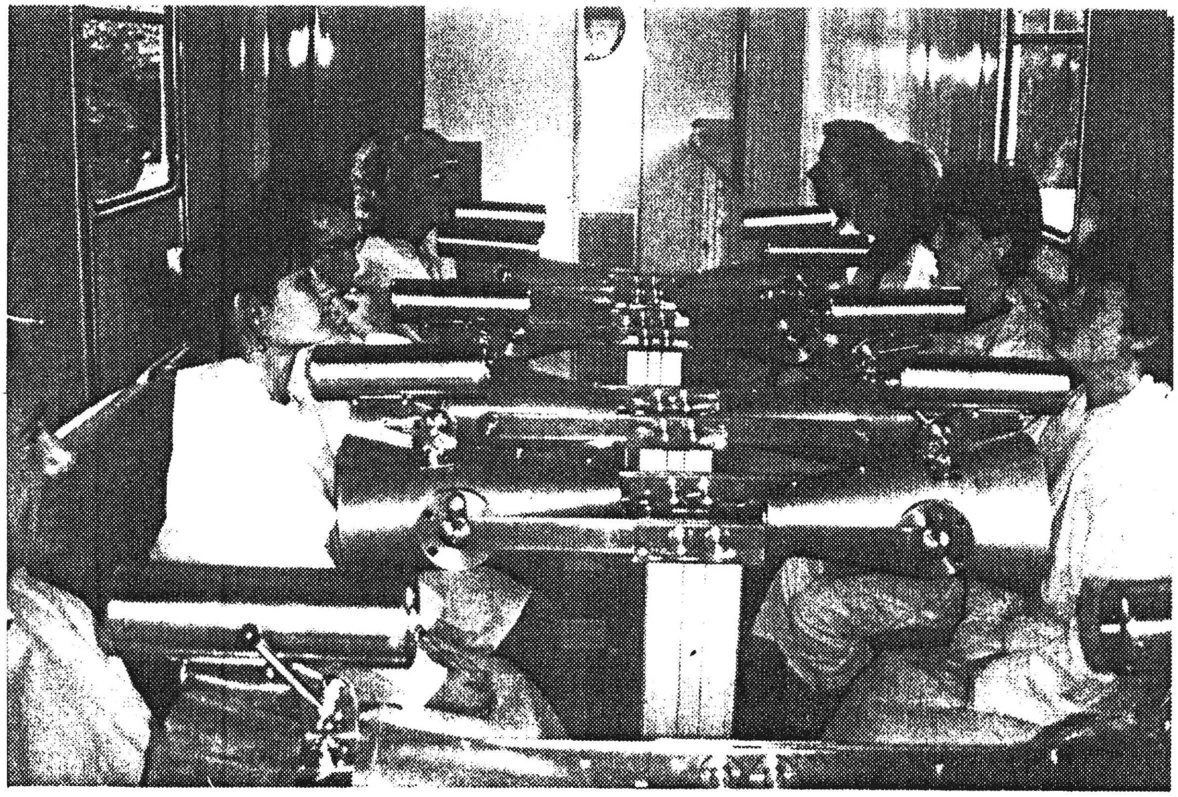

Fig.6 - 12 spectrometric units into the 20 tons lorry

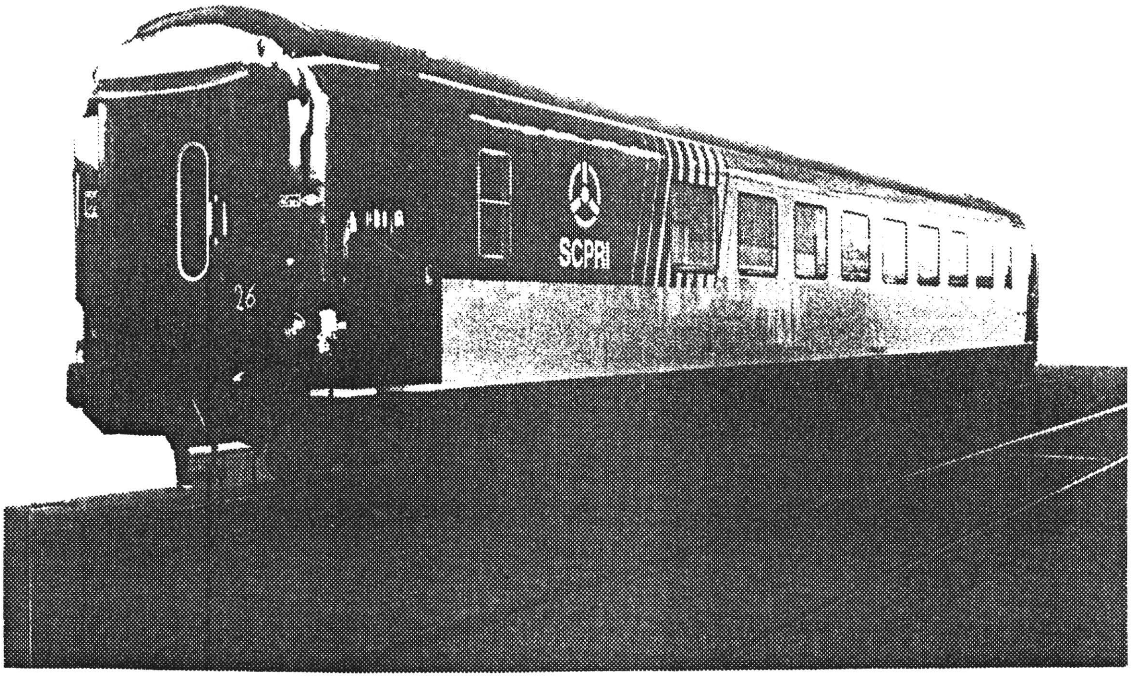

Fig.7 - The railroad carriage

Fig.8 - 32 spectrometric units into the carriage

IV. AN EVALUATION OF INSTRUMENTS USED FOR MEASURING GAMMA BACKGROUND RADIATION AND THEIR UTILITY IN NUCLEAR EMERGENCIES

P H Burgess, D R McClure and M J Clark

National Radiological Protection Board
Chilton
Didcot
Oxon
OX11 ORQ

ABSTRACT

Five instruments, suitable for measuring environmental background gamma dose rates, have been assessed to determine their suitability for the task and ease of use in emergency situations such as those prevailing after the Chernobyl reactor accident. The selection of instruments for this evaluation has been influenced by those commonly used within the European Community for the task, but one relatively new instrument has also been included. In addition, an instrument developed to discriminate between variations in natural and artificial gamma emitting radionuclides has been evaluated.

A comprehensive evaluation programme has been followed, which involved the instruments in field evaluation as well as the more common laboratory measurements, to allow the instruments to be assessed under realistic operating conditions. The laboratory measurements have included: linearity tests to determine the variation in response with indicated dose and/or dose rate; energy and polar response, to investigate response variations with changes of energy and direction of incident radiation respectively; and environmental tests of dependence on temperature and humidity. The battery life of each instrument has also been determined at background conditions. The field measurements covered a wide range of gamma radiation levels and environmental conditions. The sites used for measurements included regions where there are high levels of natural radionuclides and those containing radionuclides from artificial sources.

1. INTRODUCTION

The primary aim of this work has been to investigate the utility of straightforward gamma dose rate measurements during nuclear emergencies. A major part of the work has been practical, involving a comparative evaluation of the performance of five portable instruments commonly used for environmental gamma dose rate measurements. Some of the detectors used in these instruments are also the basis of permanent incident detection systems around nuclear installations.

The five instruments were chosen for this evaluation as being representative of those most commonly used for environmental gamma dose rate measurements in European countries, but the selection was not exhaustive, and one instrument was a relatively new model. A comprehensive evaluation programme has been followed, involving laboratory measurements akin to those required for type tests, and also field measurements to assess the instrument's performance under realistic operating conditions.

The laboratory measurements included: linearity tests to determine the variation in response to changes in dose or dose rates; energy response measurements to determine variations in response to different photon energies; polar response measurements to investigate the variation in response to radiation from different angles; and environmental tests to check variations due to changes in temperature or humidity. Finally, there were checks on the battery lifetime, an important feature for portable instruments.

The field measurements were carried out in various parts of Britain in weather conditions that ranged from warm and dry to windy with heavy rain. The sites included areas where there is a high natural gamma ray background from terrestrial sources, an area where deposition from the Chernobyl accident was relatively high and areas in the vicinity of the Sellafield nuclear reprocessing plant where the environment is contaminated with artificial radionuclides. Measurements were also carried out in a typical brick-built house and garden, and in the Board's low background facility used for whole body measurements. The measurements therefore covered a wide range of gamma radiation levels and environmental conditions.

2. THE ROLE OF GAMMA RADIATION MEASUREMENTS IN EMERGENCIES

In the event of a nuclear accident releasing radionuclides into the atmosphere and leading to deposition in the environment, the measurement of the gamma radiation dose rate can provide rapid and straightforward indication of deposition and the need for further, more sophisticated measurements. As the experience of the Chernobyl accident shows, in the immediate aftermath of such an accident, there is intense pressure for measurements to be made in the environment, especially for reassurance purposes, but also because of the potential need for the early introduction of countermeasures. Each countermeasures need to be introduced quickly before laboratory measurements on foodstuffs and environmental samples are available, and gamma radiation measurements can quickly delineate areas where countermeasures may be necessary. This would help to ensure that resources for laboratory measurements are concentrated on samples which may have radiological significance. The Soviet experience in the Ukraine and Byelorussia after the Chernobyl accident also showed the usefulness of gamma dose rate measurements as a basis of early dose assessments after a serious accident(1,2).

In the UK as in other EC countries, arrangements for responding to nuclear emergencies have undergone considerable review since 1986, and many organisations which previously had little or no interest in radiation measurements now take a strong interest and will have a measurement role to play in any future nuclear emergencies. These organisations have tended to opt for instruments which measure gamma dose rates because of their straightforward nature, compared to the techniques required for laboratory measurements on environmental samples or foodstuffs. These developments should make a comparative review of instruments commonly used in EC countries of general interest.

It is recognised that, although gamma dose rate measurements have great utility, they also have limitations especially in comparison with spectral measurements using germanium detectors. Developments in instrumentation are leading to increased portability of instruments based on germanium detectors, but they are still expensive and require expert handling. A straightforward method of providing limited spectral information has been developed in the UK using sodium iodide detectors, and this has been used successfully to monitor hill farms adversely affected by Chernobyl radiocaesium fallout. This technique is described and some results presented.

3. THE EVALUATION OF INSTRUMENTS IN THE LABORATORY

3.1 Linearity

The aim of this test was to quantify any variation in response for the full range dose and/or dose rate over which the instrument is designed to operate.

3.1.1 Method

The response of the instrument to the 662 keV gamma radiation from ^{137}Cs was determined over the complete range of dose and/or dose rate for each instrument. The response is defined as the ratio of the indicated dose or dose rate to the true dose or dose rate at the position of the centre of the detector, determined in the absence of the detector.

3.1.2 Results

The results of these measurements are presented in Section 1 of each compilation, as an overall mean for all ranges of either dose and/or dose rate, along with the associated standard deviation. The response factors for dose rate measurements were all within ± 10% of the known dose rate over their range of use, with the exception of the Mini Instruments 6-80, which is designed to have a mean response factor of about 0.72 on its analogue display (the digital display on this instrument is normally used for dose rate measurements). For integrated dose measurements the results were similarly good, with the exception of the MAB 605 which showed an unusually low response over the range.

3.2 Energy Response

The objective of these measurements was to determine the variation in the response of the instrument with photon energies typical of those which might be found in the environment following an accidental release.

3.2.1 Method

All measurements were made at a fixed indicated dose or dose rate. The radiation qualities used were those recommended by the International Standards Organisation(3). The X-ray qualities used were from the ISO Narrow series of reference filtered X-radiations with effective energies between 33 keV and 248 keV. The gamma radiations used were those from ^{137}Cs, ^{226}Ra and ^{60}Co sources, using highly collimated beams.

3.2.2 Results

The results of these measurements are presented graphically in each compilation. It is important to note that the results are expressed in terms of the quantity Exposure (C/kg) for all instruments, with the exception of the Mini 6.80, where the quantity is absorbed dose to air in free air and the Bicron Microsievert, where the quantity is Ambient Dose Equivalent H^* (10). All results are normalised to unity at 662 keV (^{137}Cs). The results for the five instruments are shown in Figures 1, 4, 7, 9 and 11. The Szintomat 6134A and the MAB 605 had the best energy response over the range 30 keV to 1.25 MeV. The other instruments had relatively poor responses below 60 keV, but this is to be expected for Geiger Muller detectors and especially for the thick walled high pressure ionisation chamber of the Reuter Stokes RS-112. For measurements in the environment following an accident at a nuclear power station or reprocessing plant, a poor response below 60 keV is not likely to be important.

3.3 Polar Response

These measurements were performed to determine the variation of response with angle of incident radiation, and to check whether its response was reasonably uniform, sufficient to provide reliable environmental measurements.

3.3.1 Method

The polar response of each instrument was measured by rotating the instrument about the centre of its detector, in the particular plane chosen, whilst keeping the radiation intensity effectively constant. Where applicable, more than one plane or orientation has been examined. The radiation qualities used were those recommended by the International Standards Organisation(3). The X-ray qualities were from the ISO Low and Narrow series of reference filtered X-ray radiations. The gamma radiations was from ^{137}Cs in a highly collimated beam.

3.3.2 Results

Again the results of these measurements are presented graphically in the compilation of results for each instrument. The results are normalised to unity in the normal direction of use, and are shown in Figures 2, 3, 5, 6, 8, 10, 12 and 13. The polar responses of some instruments were measured in two distinct orientations. It was expected that the response of the Mini Instruments 6-80 with a cylindrical detector, and the Reuter Stokes RS-112 with a spherical detector, should be virtually perfect when the detectors are placed in their normal field positions. This was confirmed for the RS-112 (Figure 12) because no such polar response measurements had been carried out at the Board before, for this particular instrument. Such a confirmation was not thought necessary for the 6.80, because its polar response with the detector in the vertical position has been published. However measurements were made with the detector placed horizontally in the beam (Figure 8).

3.4 Temperature Dependence

The objective of these measurements was to determine any dependency of instrument operation on temperature which might make it unsuitable for use in the environment.

3.4.1 Method

Each instrument was placed in an environmental chamber and initially operated at a temperature of 20°C. Under these conditions, the background reading and a higher indication produced by an ^{241}Am gamma source were recorded. The temperature of the chamber was then adjusted to 0°C and the instrument left for two hours before further readings at background and the higher indication were once again recorded. This procedure was then repeated at temperatures of -10°C, -20°C and 40°C.

3.4.2 Results

The results of these tests are presented in Section 4 of the compilation of results for each instrument, expressed as a percentage change of the indication at the temperatures of interest compared to the indication at 20°C. In general, the instruments showed greater variations in response due to temperature changes at background levels, than to temperature changes when the source was present. The exception to this was the Automess Szintomat 6134A which showed a greater variation when the source was present. The most stable instrument over the whole range of temperature changes was the Reuter Stokes RS-112 followed closely by the Mini Instruments 6-80. The other instruments, which all used scintillation detectors, tended to exhibit significant variations in response. In particular the Bicron microsievert showed some very large variations with changes in temperature.

3.5 Humidity Dependence

The objective of these measurements was to determine any dependency of instrument operation on humidity which might make the instrument unsuitable for use in the environment.

3.5.1 Method

Each instrument was placed in an environmental chamber and initially operated at a temperature and relative humidity of 20°C and 60% Rh respectively. Under these conditions, the background reading and a higher indication produced by an ^{241}Am gamma source were recorded. The chamber was then adjusted to a temperature of 35°C and a relative humidity of 95% Rh and the instrument left for two hours before further readings, at background and the higher indication, were once again recorded.

3.5.2 Results

The results of these tests are presented in Section 5 of the compilation of results for each instrument, as the percentage change of the indication at 35°C and 95% Rh compared to 20°C and 60% Rh. The results are similar to those for temperature dependence with the most stable instruments being the Reuter Stokes RS-112 followed by the Mini Instruments 6.80. However, in this case, the performance of the 6-80 was matched by the MAB 605 which uses a scintillation detector. The other instruments based on scintillation detectors showed considerably more variation in response to changes in humidity, both at background levels and when a source was present.

3.6 Battery Life

The aim of the measurements was to determine how long the batteries could be expected to power the instrument under normal operational conditions, without affecting overall performance.

3.6.1 Method

As applicable, the instruments were either fitted with new alkaline batteries or their own internal batteries given a full charge prior to making measurements. The instruments were then continuously operated at background level for approximately eight hours each day.

3.6.2 Results

The results of these tests are presented in Section 6 of the compilation of results for each instrument. These are quoted as the length of time that the batteries can be expected to satisfactorily power the instrument, when operated for 8 hrs a day on consecutive days. The Mini Instruments 6.80 showed the longest battery life, with the capacity to operate for nearly 60 consecutive 8 hr days. The Reuter Stokes could operate for 15 or 16 consecutive days, while the Bicron microsievert and the Automess Szintomat 6134A could last for 8 or 9 days. The MAB 605 could only operate for about two consecutive days.

4. THE EVALUATION OF INSTRUMENTS IN FIELD CONDITIONS

4.1 General Requirements

All the instruments considered in this study are designed to measure normal background dose rates and to detect changes in dose rate caused, for example, by the passage of a radioactive plume or by deposition of radionuclides on the ground. There is a conflict between the requirements for sensitivity to incident radiation and portability of the instrument. In general the smaller, lighter instruments are less efficient at detecting small increases in dose rate.

Hence it is essential to consider not only the metrological performance of the instruments in a laboratory (section 3) but also their operation under typical conditions in the environment. The following features of an instrument were considered to be important.

(a) the rapidity with which a measurement of dose rate can be made at normal levels, which depends mainly on the detector sensitivity but also on the choice of time constant, for ratemeters, and the method of integration for other instruments;
(b) whether the instrument indicates dose rate directly or whether it produces an indication that requires further calculation;
(c) the display visibility;
(d) whether the instrument requires an external timer or other equipment;
(e) the ease of setting up the equipment in the measurement position, including the provision of tripods, stands, ease of connecting and disconnecting cables with wet or gloved hands etc;
(f) the length of time taken to unpack and pack the instrument from its transport case;
(g) whether the instrument is fully weatherproof or requires protection from rain, together with ease of cleaning and drying;
(h) whether the instrument is likely to blow over in strong winds;
(i) the cost;
(j) the battery life in field conditions;
(k) the weight and volume, especially in terms of the space it takes up within a small vehicle;
(l) the obtrusiveness and curiosity value.

In contrast to the metrological measurements in the laboratory, the assessment of some of the above features is relatively subjective. However, the success or failure of an environmental monitoring instrument will depend heavily on how the instrument behaves when given tests in a realistic environment.

4.2 Sites chosen for Field Measurements

Visits were made to a number of sites by two people with sufficient experience to assess instrument performance in the field. The sites covered a full range of conditions in Britain, and are listed below:

(a) the interior of a brick terrace house;
(b) a garden, away from large buildings, with a clay soil above chalk;
(c) a limestone area with a relatively high γ background dose rate, which, at the time of the visit, was snow covered;
(d) an area of relatively high Chernobyl deposition on a thin organic soil covering rock;
(e) an area of relatively high Chernobyl deposition on deep boggy moorland which previously had a very low background γ dose rate;
(f) a sandy, pebbly beach contaminated mainly by ^{137}Cs as a result of discharges to sea from nuclear fuel reprocessing;
(g) a silt estuary, contaminated by a range of nuclides, including ^{137}Cs and ^{241}Am, as a result of discharges to sea from nuclear fuel reprocessing;
(h) the NRPB shielded steel room.

The weather ranged from relatively warm and dry conditions, to a day when there was intermittent heavy rain and a strong wind at a temperature only a few degrees above 0°C. The conditions are described in detail in Table 1.

4.3 Indicated Dose Rates

The instruments used were marked in a variety of measurement quantities. To allow a proper comparison, the readings have been converted to the quantity air kerma, nGy h^{-1}. The conversion factors for instruments marked in µSv h^{-1} is 1 µSv h^{-1} = 873 nGy h^{-1} to air in air and for those marked in exposure is 1 µR h^{-1} = 8.73 nGy h^{-1} to air in air.

The result of the measurements are given in Table 2, for each site and instrument. No corrections have been made to the indications with the exception of the Mini Instruments type 6-80 where the intrinsic activity within the steel and glass GM detector contributes 0.2 counts per second. The measured dose rates from the 6-80 have also been calculated for two responses, that for ^{137}Cs and that for ^{226}Ra in equilibrium with its daughters. The results are presented in Table 2.

Comparison of the results indicates close agreement between the Mini Instruments 6-80 and the Reuter Stokes RS-112, while available readings with the MAB 605 instrument tended to be slightly lower, but still very close. In contrast the Automess Szintomat 6134A gave much lower readings on the areas of natural radioactivity, but produced a much closer estimation of the man made component in contaminated areas. The Bicron instrument almost always gave the lowest answer especially in areas where there were only natural radionuclides present.

4.4 Observations on instrument performance

The qualities, advantages and disadvantages are assessed in the Tables 3 to 14, under the categories described in the 4.1. A summary of the performance of the individual instruments is given below.

4.4.1 Automess Szintomat 6134A

This instrument is extremely versatile and is capable of covering an enormous dose range from background levels to 10 Sv h^{-1}. However, it is not easy to use as an unattended environmental monitor, because its dose function operates in units of 0.01 µSv and there is no built in timer. It would normally be used in the dose rate mode, which would require a means of averaging the indication, even on the longest time constant. Its temperature stability is very good for temperatures in the range -10°C to +20°C, but is poor at -20°C and +40°C. In addition, it requires a special tripod for unattended use, and it is rather expensive.

Its niche, then, would be as an emergency instrument, capable of making good measurements of dose rates significantly in excess of background up to levels of 1 Sv h^{-1}.

4.4.2 The Bicron Microsievert

This instrument is primarily a hand held area monitor for the workplace, which is sensitive enough for measuring environmental gamma background dose rates. However, it has a very high change of indication with temperature at background dose rates, enough to rule it out for genuine environmental monitoring. It was otherwise light, portable, inexpensive and accurate, and would be ideally suited to the rapid measurement of dose rate from 3 or 4 times normal background levels upwards.

4.4.3 Mini 6-80

This instrument is light, easy to use, reliable and inexpensive. It is insensitive to changes in temperature and humidity and is well sealed against rain. It is capable of producing very accurate results if the main radiation components are known, for example, if ^{137}Cs has been deposited on an area for which the natural background is known, and is capable of producing more than adequate answers in previously unsurveyed areas. Probes and ratemeters can be interchanged in emergency without significantly affecting the response. Its only disadvantages are the need to calculate dose rate from the scaler readings and that it takes longer to obtain answers to a given statistical uncertainty for dose rate changes of only 10% above background, compared with some of the other equipment tested.

4.4.4 MAB 605

This instrument is similar in operation to the Szintomat but is in many ways more difficult to use. The battery charging cable was inadequate and the resultant short circuit damaged a fuse and rendered the instrument inoperative. Connecting the probe to the ratemeter was difficult. Its background dose rate stability at low temperatures was very poor. The calibration of the dose range was very poor although agreement with the dose rate range in the field was rather better. Again, it would probably best be used as a dose ratemeter in most circumstances, as there is no internal timer, but it has the advantage over the Szintomat of a better dose resolution, 1 nSv, although the dose range on the instrument tested was incorrectly marked in units of 0.1 µSv.

4.4.5 Reuter Stokes RSS-112

This instrument produces very accurate, rapid answers and has the advantage of a large internal memory, which allows it to be left out in the field for several days and the results analysed later. It is, however, extremely large, heavy, expensive and not particularly easy to use. In addition the background indication is temperature dependent if re-zeroing is not carried out after significant temperature changes. It would best be suited as a transportable installed monitor for situations such as an investigation into ^{41}Ar dose rates from research reactors.

5. THE UTILITY OF INSTRUMENTS USING SODIUM IODIDE DETECTORS

As mentioned in Section 2, the main drawback of most portable gamma dose rate instruments is the lack of spectral information. In response to the need in the UK to monitor hill farms for ^{137}Cs contamination from Chernobyl a portable instrument has been developed which can discriminate between variations in natural background radiation and ^{137}Cs levels in soil.

This instrument comprises a 51 mm x 51 mm sodium iodide detector, connected to a dual channel scaler timer. The two channels are set to photopeak energies of 600 to 900 keV and 900 to 1200 keV. Channel A is intended to detect ^{137}Cs and ^{134}Cs in the environment while Channel B provides a value which can be used to predict the natural γ component in Channel A, thus yielding a net ^{137}Cs and ^{134}Cs count. This can be converted to an activity per unit area, in Bq m^{-2}. The instrument was developed by John Caunt Ltd to a specification developed by NRPB(4) for the Food Sciences Division of the Ministry of Agriculture, Fisheries and Food (MAFF), and based on equipment already in use for in-vivo monitoring of sheep(5).

Various measurements were made in the environment to establish the utility of the instrument, and the results are shown in Table 15. Measurements using the dual channel NaI detector and the Mini Instruments 6.80 have been compared in eight distinct environments, ranging from a garden to a beach, and from a normal house to the Board's low background laboratory.

Table 15 shows that the garden and a area of moorland bog have very similar environmental dose rates (70-80 nGy h^{-1}) as measured by the Mini Instruments 6-80. However the dual channel NaI detector shows clearly that the dose rate in the garden is due primarily to natural radionuclides, while the moorland is contaminated by artificial radionuclides (in this case primarily ^{137}Cs from Chernobyl). For the garden, the ratio of counts per 1000 seconds from Channel A (600-900 keV) to those from Channel B (900-1200 keV) is less than 2:1, while the same ratio for the moorland bog is nearly 10:1. Similarly, measurements using the Mini Instruments 6.80 in a house and on a beach showed nearly identical environmental dose rates in the range 120-130 nGy h^{-1}, while the dual channel NaI detector ratio for Channel A to Channel B gave ratios of approximately 2:1 for the house and 10:1 for the beach. In the latter case, the artificial radionuclides are from the nearby Sellafield reprocessing plant.

The results show the potential utility of this type of instrument for making measurements following an accidental release of known composition. The instrument could be used by relatively unskilled personnel to delineate contaminated and uncontaminated areas, once sufficient detailed information on deposited radionuclides has been obtained from an intrinsic germanium detector, giving spectrometric measurements on environmental samples. The settings used for the measurements given in Table 15 were tailored for the detection of ^{137}Cs in the environment. They could be set alternatively to establish ^{131}I to ^{137}Cs ratio in the immediate aftermath of a nuclear accident.

6. SUMMARY AND CONCLUSIONS

Five portable instruments capable of measuring background gamma radiation in the environment have been evaluated in the laboratory and in the field. Apart from one relatively new instrument, these instruments are representative of those commonly used in EC countries, but the selection of instruments was not exhaustive. The laboratory evaluation included linearity measurements, energy response, polar response, variations due to changes in environmental conditions, and battery lifetime. The field measurements were carried out in a variety of weather conditions and in areas that showed variations in natural background radiation and levels of contamination from artificial radionuclides.

Plastic scintillator instruments operating in the current mode have some disadvantages for environmental monitoring because of the uncertainty associated with changes of temperature. Ion chamber instruments are less sensitive to changes in temperature but the detector would have to be very large to generate sufficient signal, and therefore high pressure argon filled chambers are normally used which are heavy and, to a minor extent, hazardous. Pulse counting instruments, such as GM detectors and proportional counters, are inherently more stable with changes in temperature and have simpler electronic circuitry, but they do not measure the quantity of interest directly. However, they can be provided with energy compensation filters, which allow energy and polar responses at least as good as those of the high pressure ion chambers, and which are not significantly inferior to those of the plastic scintillators.

The main limitation of measurements using any of the above detectors is the lack of spectral information. The most accurate information can be obtained from modern Ge detector instruments and there are some portable versions on the market. However, these require skilled operation and interpretation and, during an emergency, some simpler instruments could be invaluable. It is possible to use a portable instrument utilising a sodium iodide detector which can discriminate changes in natural background from changes in levels of artificial radionuclides. This type of instrument is potentially the most useful in an emergency because it could give rapid and reliable information on the extent of contamination and the potential need for countermeasures. It is recommended that further work be carried out to investigate the utility of this type of emergency instrument.

References

1 IAEA Summary Report on the Post-Accident Review Meeting on the Chernobyl Accident. Vienna, IAEA Safety Series No 75-INSAG-1 (1986).

2 Ilyin, L A, et al. Radiocontamination patterns and possible health consequences of the accident at the Chernobyl nuclear power station. J. Radiol. Prot 10 (1), 3-29 (1990).

3 International Organisation for Standardisation. X and gamma reference radiations for calibrating dosemeters and dose ratemeters and for determining their response as a function of photon energy. Geneva, ISO-4037 (1979).

4 Burgess, P H. Personal communication (1988).

5 Meredith, R C K, Mondon, K J and Sherlock J C. A rapid method for the in vivo monitoring of radiocaesium activity in sheep. J Environ. Radioactivity 7, 209-214 (1988).

Appendix A

Compilation of Results for Specific Instruments

1. AUTOMESS - SZINTOMAT 6134A

2. BICRON - MICROSIEVERT

3. MINI INSTRUMENTS - Environmental Radiation Meter Type 6.80

4. MÜNCHENER APPARATEBAU - Dose and Dose Ratemeter MAB 605

5. REUTER-STOKES - RSS-112 Environmental Monitoring System

Figures

A1 - Compilation of results for the Automess Szintomat 6134A

DESCRIPTION

Instrument - Automess Szintomat 6134A

Detector - Internal or externally mounted 44 mm dia x 14 mm thick plastic and ZnS(Ag) Scintillator.

Ratemeter

Dose range covered	- 0-999.99 µSv LED display
Dose rate range	- 3 full decade (0.01 - 0.1 - 1.0 - 10) analogue meter, manual or automatic scaling of µSv/h, mSv/h, Sv/h.
Power requirements	- 3 x D cells (R20)
Features/Controls	- Dose and dose rate alarm settings - Automatic or manual range selection - Switchable time constants (low, medium, high) - Connection for external power supply - Connection for recorder and alarm level outputs - Provision to remove detector from body of instrument.
Size: Electronics*	- 230 x 300 x 120 mm
Probe	- 300 x 65 mm dia
Weight: Electronics	- 3 kg
Probe and cable	- 1.7kg

* With probe mounted internally.

RESULTS OF TESTS

1. Linearity

Response of the instrument to 662 keV γ radiation from ^{137}Cs, determined over the stated ranges.

Dose Linearity		Response Factor	Standard Deviation
From	To		
0.05 µSv	1.0 µSv	0.94	0.075

Dose Rate Linearity		Response Factor	Standard Deviation
From	To		
0.05 μSvh^{-1}	60 $mSvh^{-1}$	0.99	0.075

Automess Szintomat 6134A

2. Photon Energy Response

See Figure 1 for the results of measurements.

3. Polar Response

See Figures 2 and 3 for the results of measurements.

4. Temperature Dependence

Percentage change of indicated instrument reading compared to that at 20°C, for normal background radiation levels and when a source (^{241}Am) is present.

Radiation Level	-20°C	-10°C	0°C	40°C
Background Range = Auto	-2	-2	0	33
Source present Range = Auto	-16	-9	-8	11

5. Humidity Dependence

Percentage change of indicated instrument reading compared to that at 20°C, 60% Rh, for normal background radiation levels and when a source (^{241}Am) is present.

Radiation Level	35°C, 95% Rh
Background Range = Auto	51
Source present Range = Auto	7

6. Battery Life

Typical life of new/fully charged batteries when instrument operated for approximately 8 hours per day:

Total operating time = 62 hours.

A2 - Compilation of results for the Bicron Microsievert

DESCRIPTION

Instrument - Bicron Microsievert

Detector - Tissue-Equivalent Organic Scintillator

Ratemeter

Dose range covered	- None.
Dose rate range	- Analogue meter scaled 0-2.0 in steps of 0.1. Five switched multipliers of x 0.1, x 1, x 10, x 100, x 1000.
Power requirements	- 1 or 2 PP3 batteries (6 LR 61)
Features/Controls	- Single rotary switch off, bat, HV, and scale multipliers. Will run off one or two PP3 batteries.
Size:	- 230 x 110 x 200 mm
Weight:	- 1.4 kg

RESULTS OF TESTS

1. Linearity

Response of the instrument to 662 keV γ radiation from ^{137}Cs, determined over the stated ranges.

Dose Linearity		Response Factor	Standard Deviation
From	To		
	Not applicable		

Dose Rate Linearity		Response Factor	Standard Deviation
From	To		
0.4 μSvh^{-1}	1100 μSvh^{-1}	1.01	0.072

Bicron Microsievert

2. Photon Energy Response

See Figure 4 for the results of measurements.

NB: This instrument is designed to realise the quantity Ambient Dose Equivalent H*(10).

3. Polar Response

See Figures 5 and 6 for the results of measurements.

4. Temperature Dependence

Percentage change of indicated instrument reading compared to that at 20°C, for normal background radiation levels and when a source (^{241}Am) is present.

Radiation Level	-20°C	-10°C	0°C	40°C
Background Range = x 0.1	103	79	44	-91*
Source present Range = x 10	4	4	4	4

* Instrument HV check indicated low under these conditions and instrument exhibited erratic readings.

5. Humidity Dependence

Percentage change of indicated instrument reading compared to that at 20°C, 60% Rh, for normal background radiation levels and when a source (^{241}Am) is present.

Radiation Level	35°C, 95% Rh
Background Range = x 0.1	-81*
Source present Range = x 10	4

6. Battery Life

Typical life of new/fully charged batteries when instrument operated for approximately 8 hours per day:

Total operating time = 76 hours.

NB: This instrument has the option of being fitted with two batteries to increase operational capacity. For the purpose of this test only ONE battery was fitted.

A3 - Compilation of results for the Mini Instruments 6.80

DESCRIPTION

Instrument - Mini 6.80

Detector - Remote MC71 probe
Energy Compensated ZP1220/01 Geiger Muller tube.

Ratemeter

Dose range covered - 0-99999 counts liquid crystal display
10, 30, 60, 100, 300, 600, 1k, ∞ count times.

Dose rate range - Logarithmic (3 full decades) analogue meter scaled in absorbed dose rate in air from 0.05 μGyh^{-1} to 75 μGy h^{-1}.

Power requirements - 4 x C cells (R14)

Features/Controls - Analogue voltage output
- Manual stop/start buttons
- Rotary on/off switch + count time selection
- Automatic battery check and count save feature

Size: Electronics - 240 x 120 x 100 mm
Detector - 310 x 33 mm diameter

Weight: Electronics - 1.2 kg
Detector - 0.4 kg

RESULTS OF TESTS

1. Linearity

Response of the instrument to 662 keV γ radiation from ^{137}Cs, determined over the stated ranges.

	Dose Linearity		Response Factor	Standard Deviation
	From	To		
	2000 counts	100 k counts	56359 $\frac{\text{counts}}{\mu\text{Gy}}$	536
	Dose Rate Linearity		Response Factor	Standard Deviation
	From	To		
Digital	9 counts s^{-1}	860 counts s^{-1}	15.1 $\frac{\text{counts s}^{-1}}{\mu\text{Gyh}^{-1}}$	1.0
Analogue	0.40 μGyh^{-1}	43 μGyh^{-1}	0.72	0.03

A3 (cont.)

Mini Instruments 6.80

2. Photon Energy Response

See Figure 7 for the results of measurements.

3. Polar Response

See Figure 8 for the results of measurements.

4. Temperature Dependence

Percentage change of indicated instrument reading compared to that at 20°C, for normal background radiation levels and when a source (^{241}Am) is present.

Radiation Level	-20°C	-10°C	0°C	40°C
Background Range = 300 s	19	11	15	8
Source present Range = 300 s	-2	-2	-2	0

5. Humidity Dependence

Percentage change of indicated instrument reading compared to that at 20°C, 60% Rh, for normal background radiation levels and when a source (^{241}Am) is present.

Radiation Level	35°C, 95% Rh
Background Range = 300 s	11
Source present Range = 300 s	-6

6. Battery Life

Typical life of new/fully charged batteries when instrument operated for approximately 8 hours per day:

Total operating time > 460 hours.

A4 - Compilation of Results for the MAB 605

DESCRIPTION

Instrument - MAB 605

Detector - Remote 44 mm dia x 15 mm thick plastic Scintillator with ZnS(Ag) layer.

Ratemeter

Dose range covered - LED display 0-99999.9 μSv in steps of 0.1 μSv.

Dose rate range - Linear analogue meter - two scales 0 to 1 in steps of 0.02, and 0 to 3 in steps of 0.1.
Ten switched ranges 0.3, 1, 3, 10, 30, 100, 300, 1000, 3000, 10,000 μSv/h.

Power requirements - Internal sealed Pb and batteries, nominal 12V, 3Ah. Alternative plug-in mains power supply/battery charger.

Features/Controls
- Recorder output
- Dose and dose rate alarm settings
- Dose on/off/reset
- Alarm on/off
- Twelve-position Rotary Switch off-bat check + range selection.

Size: Electronics - 220 x 210 x 110 mm
Detector - 240 x 80 mm diameter

Weight: Electronics - 4.5 kg
Detector - 1.3 kg

RESULTS OF TESTS

1. Linearity

Response of the instrument to 662 keV γ radiation from ^{137}Cs, determined over the stated ranges.

Dose Linearity		Response Factor	Standard Deviation
From	To		
1 μSv	60 μSv	6.6×10^{-3}	2.1×10^{-4}

Dose Rate Linearity		Response Factor	Standard Deviation
From	To		
0.5 μSvh^{-1}	5800 μSvh^{-1}	1.16	0.063

MAB 605

2. Photon Energy Response

See Figure 9 for the results of measurements.

3. Polar Response

See Figure 10 for the results of measurements.

4. Temperature Dependence

Percentage change of indicated instrument reading compared to that at 20°C, for normal background radiation levels and when a source (^{241}Am) is present.

Radiation Level	-20°C	-10°C	0°C	40°C
Background Range = 0.3 μSvh^{-1}	-29	-30	-15	55
Source present Range = 100 μSvh^{-1}	-1	-4	-4	4

5. Humidity Dependence

Percentage change of indicated instrument reading compared to that at 20°C, 60% Rh, for normal background radiation levels and when a source (^{241}Am) is present.

Radiation Level	35°C, 95% Rh
Background Range = 0.3 μSvh^{-1}	12
Source present Range = 100 μSvh^{-1}	-4

6. Battery Life

Typical life of new/fully charged batteries when instrument operated for approximately 8 hours per day:

Total operating time = 18 hours.

A5 - Compilation of results for the Reuter-Stokes RSS-112

DESCRIPTION

Instrument - Reuter-Stokes RSS-112

Detector - RSS-211 high pressure ionisation chamber. Eight litre, spherical geometry.

Ratemeter

Dose rate range	- Auto ranging electrics with multi-function menu drive liquid crystal display, two ranges 1 μR/h to 500 μR/h (low range) and 500 μR/h to 100 mR/h (intermediate range). RS232 interface and solid state data cartridge storage facility.
Dose range covered	- 0-999R in steps of 1 μR, features as above.
Power requirements	- Internal sealed Pb acid battery nominal capacity 12V, 6 Ah. Separate plug-in charger/float power supply.
Features/Controls	- Rotary off/zero/read switch - Multiple soft key options as designated from LED menu driven graphics.
Size: Electronics	- 420 x 280 x 120 mm
Detector	- 305 x 305 x 305 mm
Weight: Electronics	- 9 kg
Detector	- 10 kg

RESULTS OF TESTS

1. Linearity

Response of the instrument to 662 keV γ radiation from ^{137}Cs, determined over the stated ranges.

Dose Linearity		Response Factor	Standard Deviation
From	To		
1 μR	10 mR	1.03	0.10

Dose Rate Linearity		Response Factor	Standard Deviation
From	To		
50 μRh^{-1}	50 mRh^{-1}	0.91	0.02

Reuter-Stokes RSS-112

2. Photon Energy Response

See Figure 11 for the results of measurements.

3. Polar Response

See Figures 12 and 13 for the results of measurements.

4. Temperature Dependence

Percentage change of indicated instrument reading compared to that at 20°C, for normal background radiation levels and when a source is present (^{241}Am).

Radiation Level	-20°C	-10°C	0°C	40°C
Background Range = 18 min Average μRh^{-1}	2	18	18	5
Source present Range = 18 min Average μRh^{-1}	3	3	1	1

5. Humidity Dependence

Percentage change of indicated instrument reading compared to that at 20°C, 60% Rh, for normal background radiation levels and when a source is present (^{241}Am).

Radiation Level	35°C, 95% Rh
Background Range = 18 min Average μRh^{-1}	2
Source present Range = 18 min Average μRh^{-1}	1

6. Battery Life

Typical life of new/fully charged batteries when instrument operated for approximately 8 hours per day:

Total operating time = 135 hours.

FIG. 1

Energy Response
Szintomat 6134 A

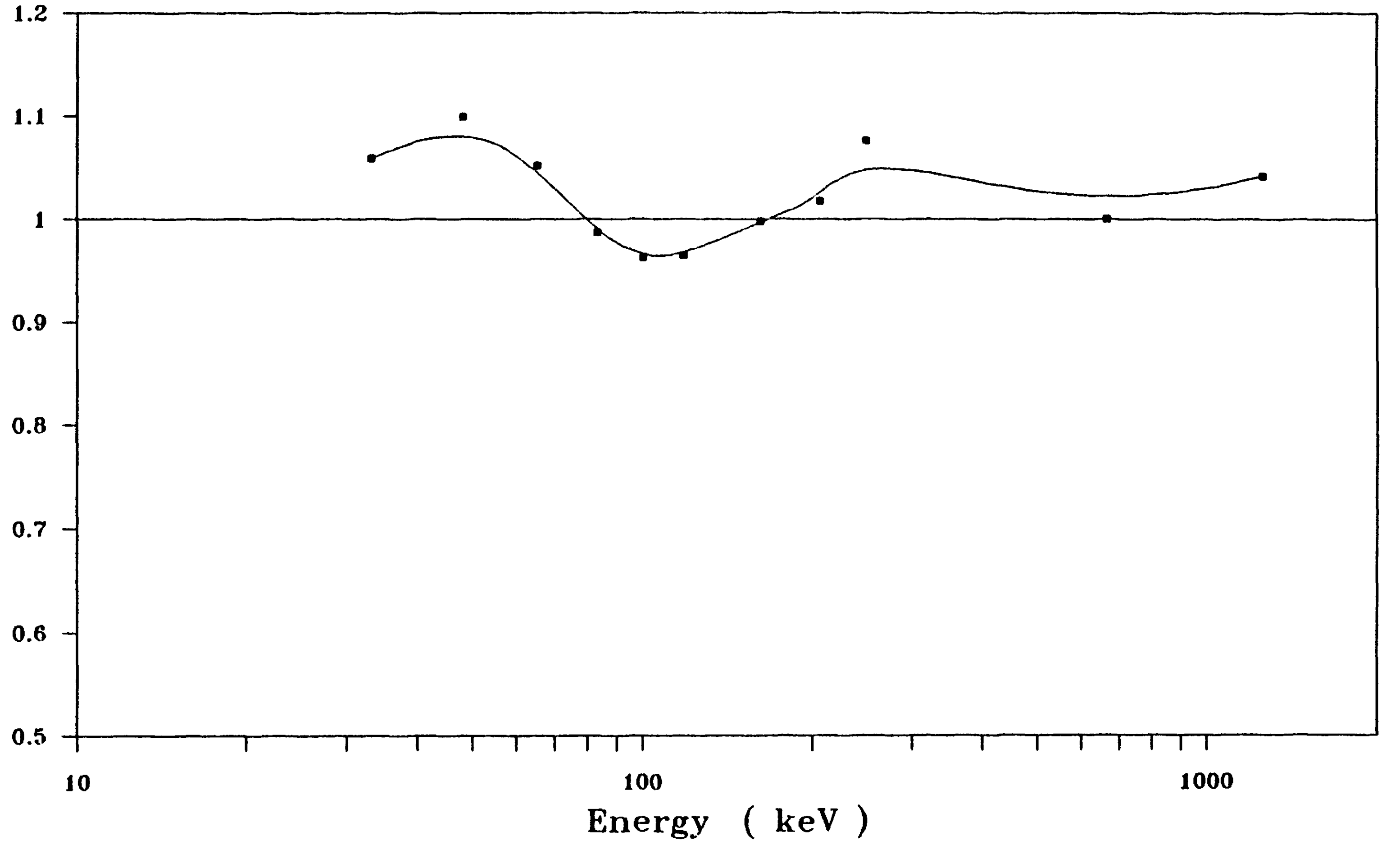

Normalised to 1.00 at 137-Cs = 1.01
mSv/ h / mSv/ h (1 Sv = 100 R)

Cap on for 662 & 1250 keV

FIG. 2

Szintomat 6134 A
Cap Off. Probe Out.

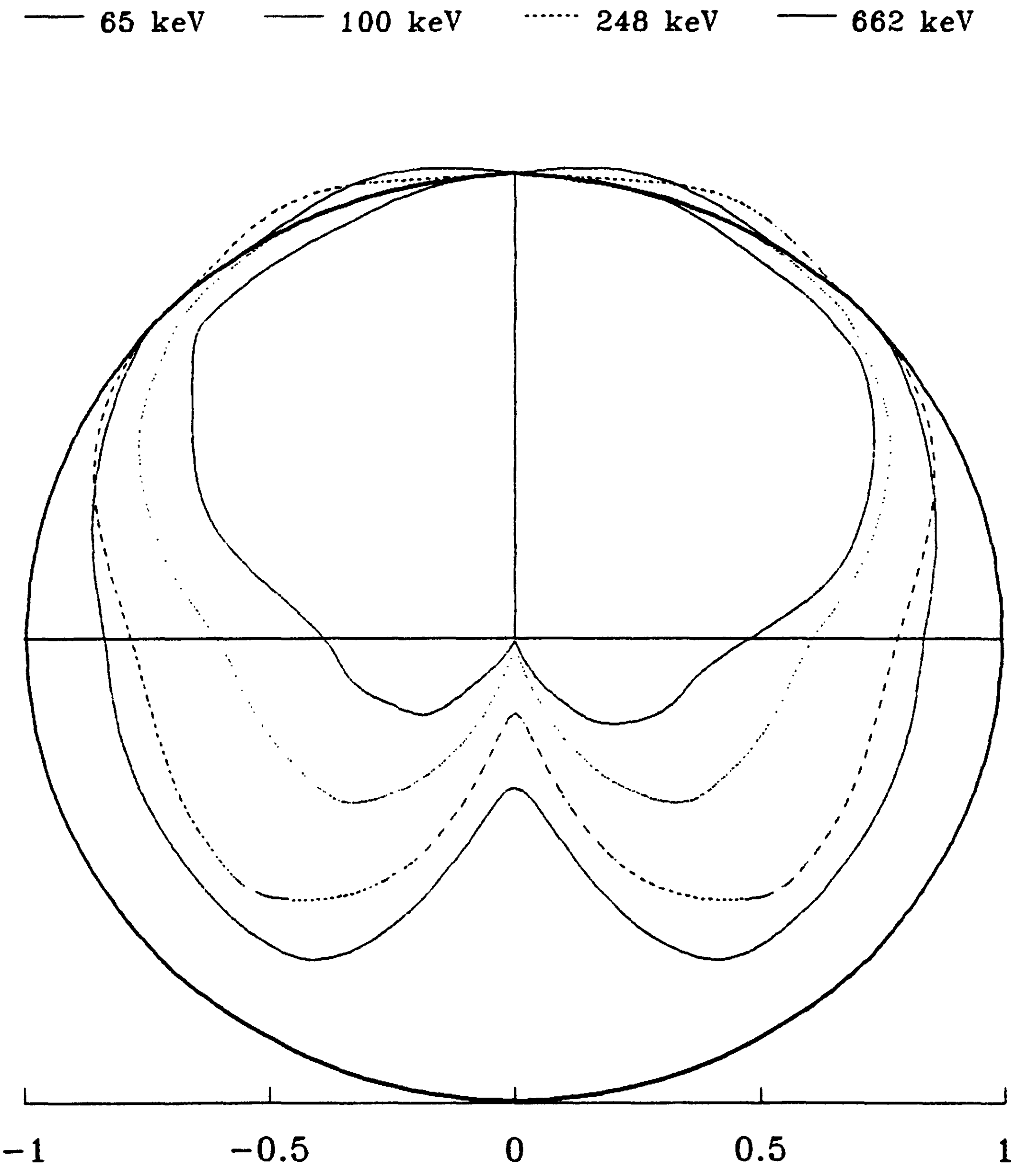

FIG. 3

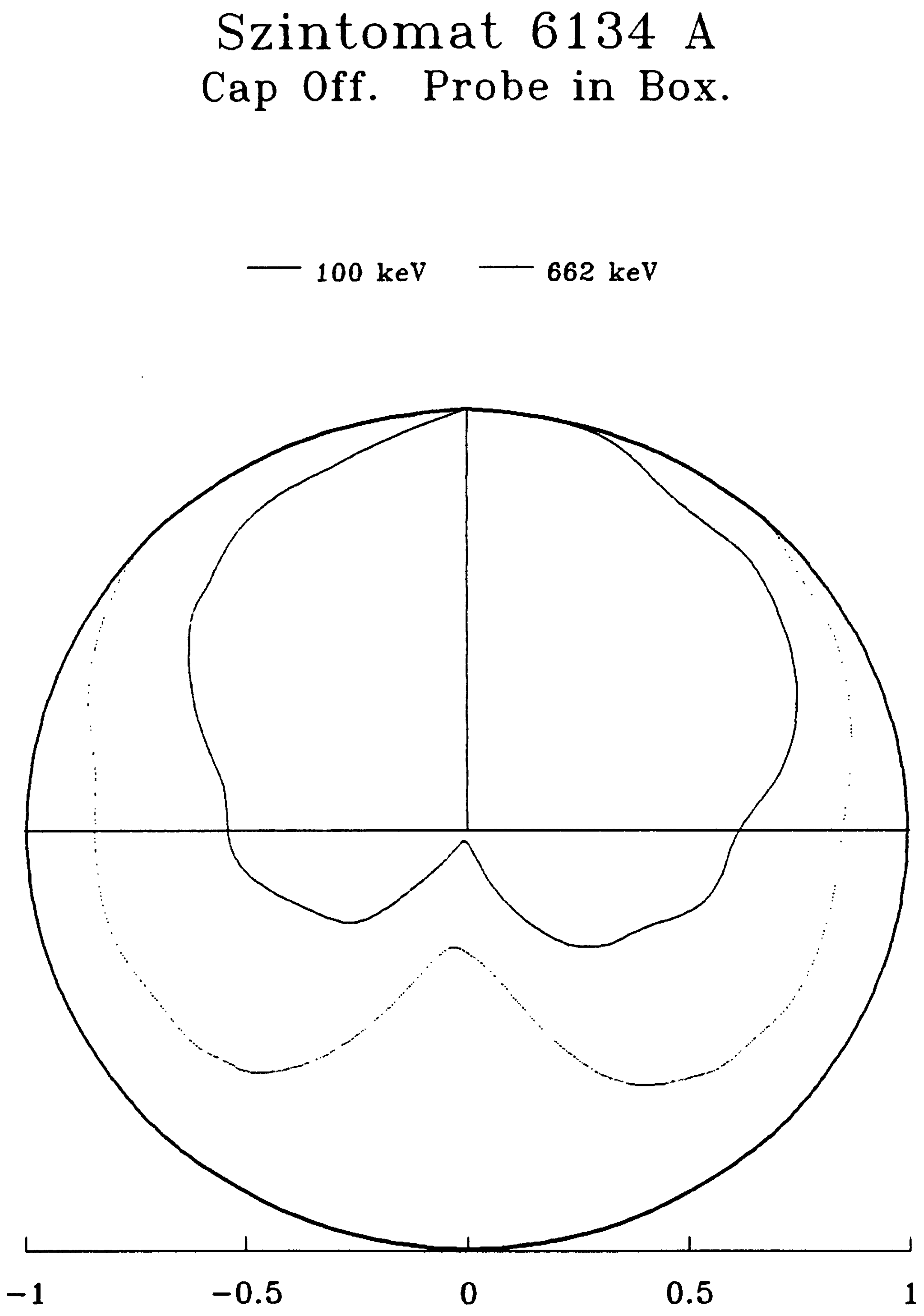

FIG. 4

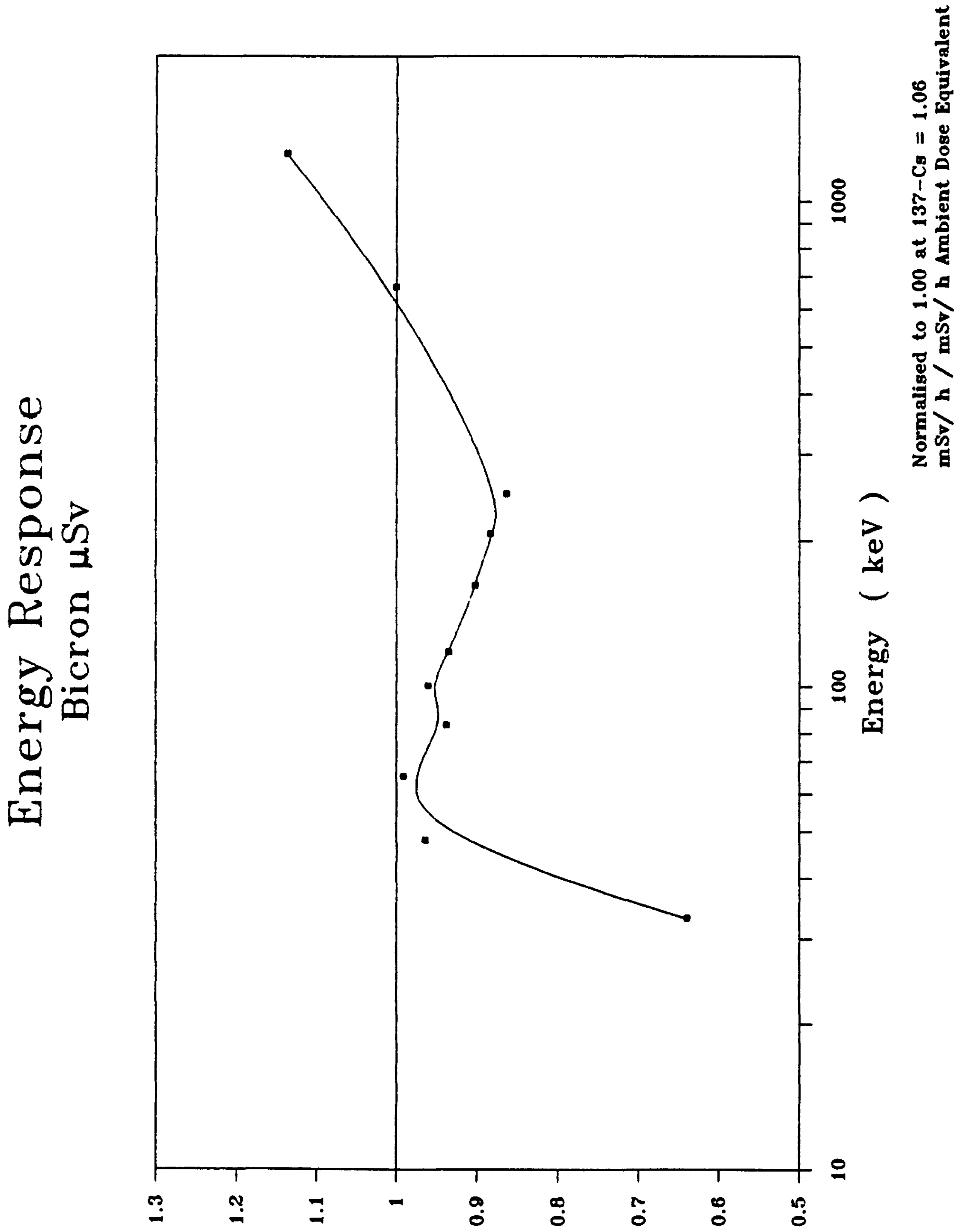
Energy Response
Bicron µSv
1.3
1.2
1.1
1
0.9
0.8
0.7
0.6
0.5
10
100
1000
Energy (keV)
Normalised to 1.00 at 137-Cs = 1.06
mSv/ h / mSv/ h Ambient Dose Equivalent

FIG. 5

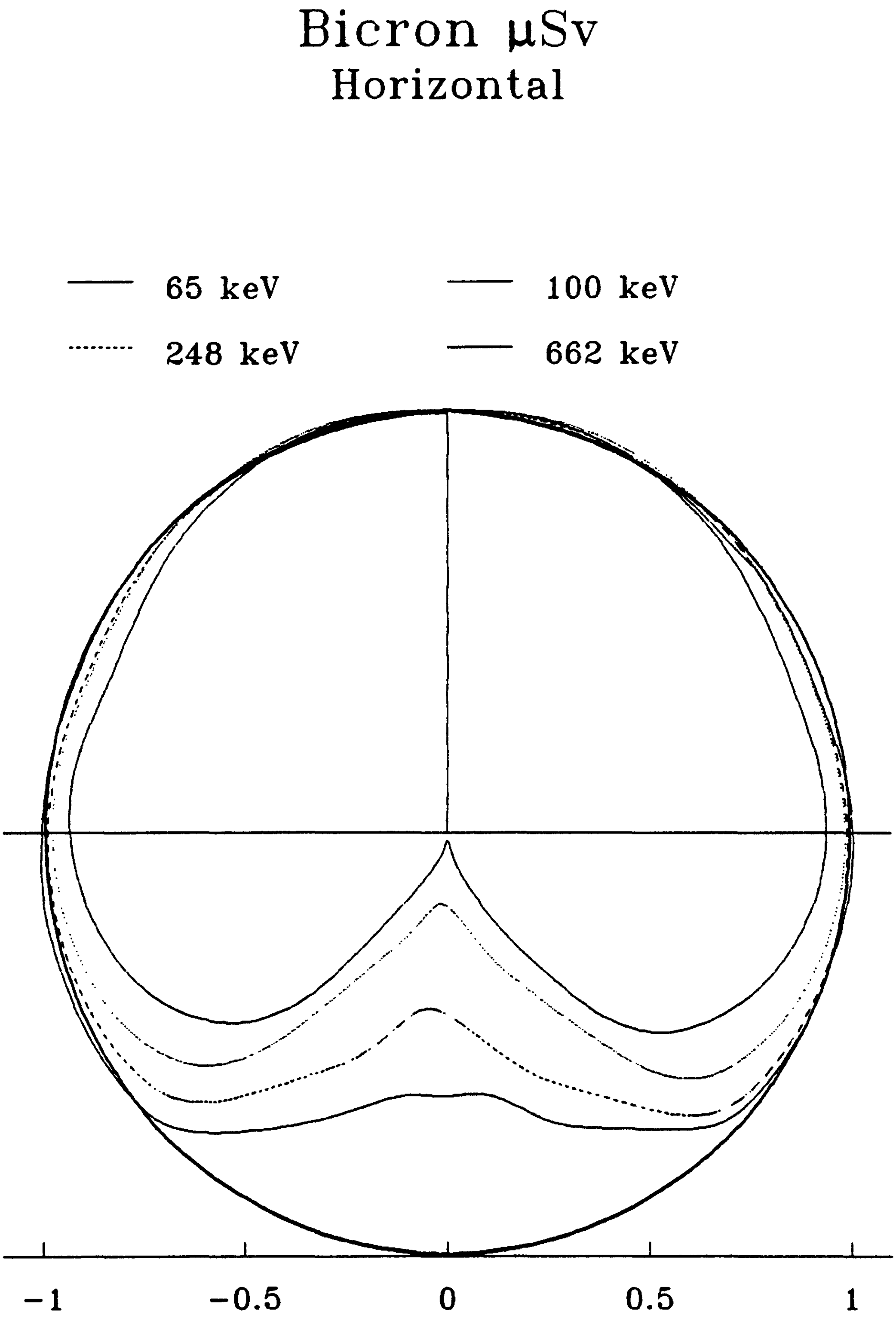

FIG. 6

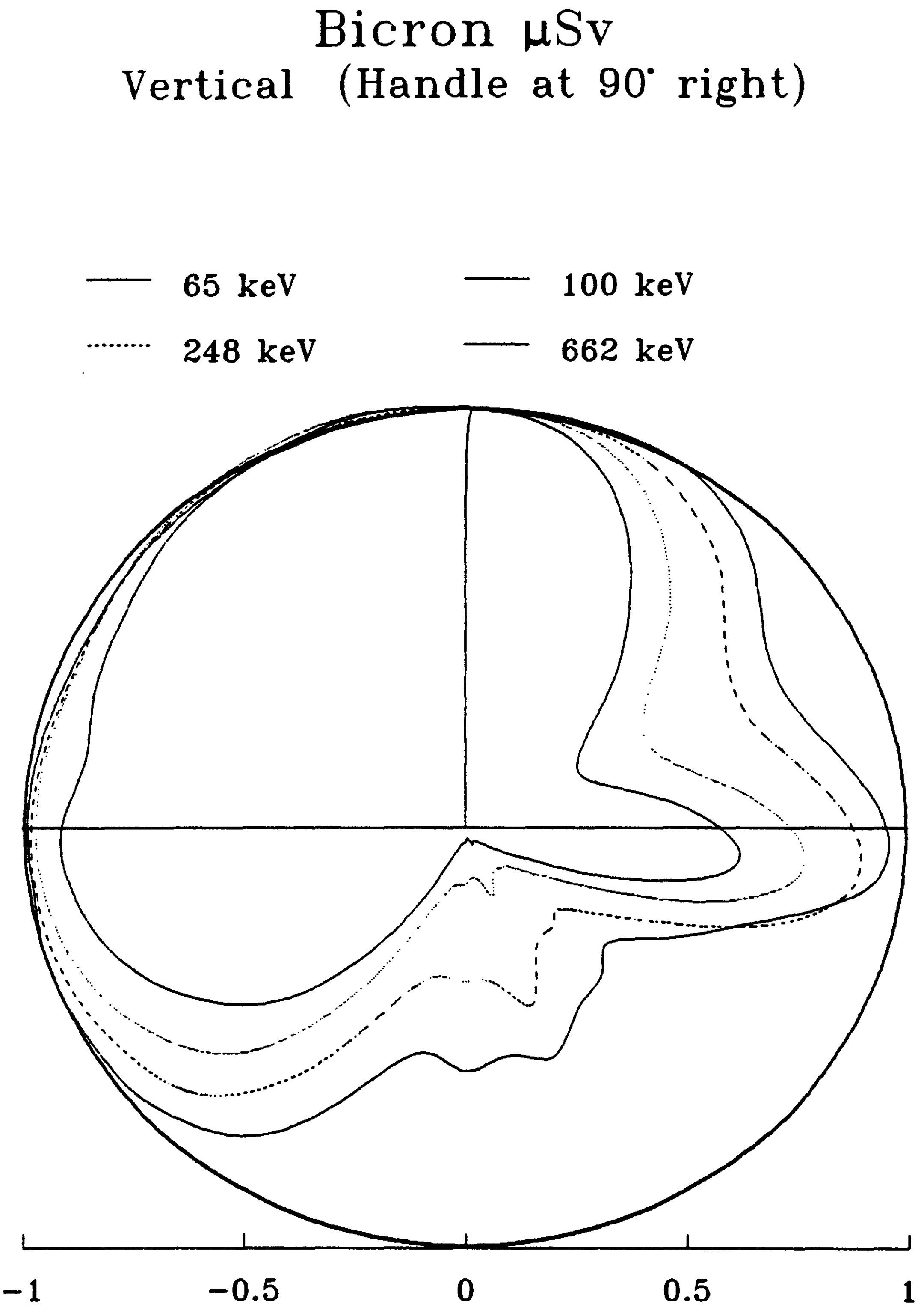
Bicron µSv
Vertical (Handle at 90° right)
65 keV
100 keV
248 keV
662 keV
-1
-0.5
0
0.5
1

FIG. 7

Energy Response
Mini 6-80 With MC 71 probe

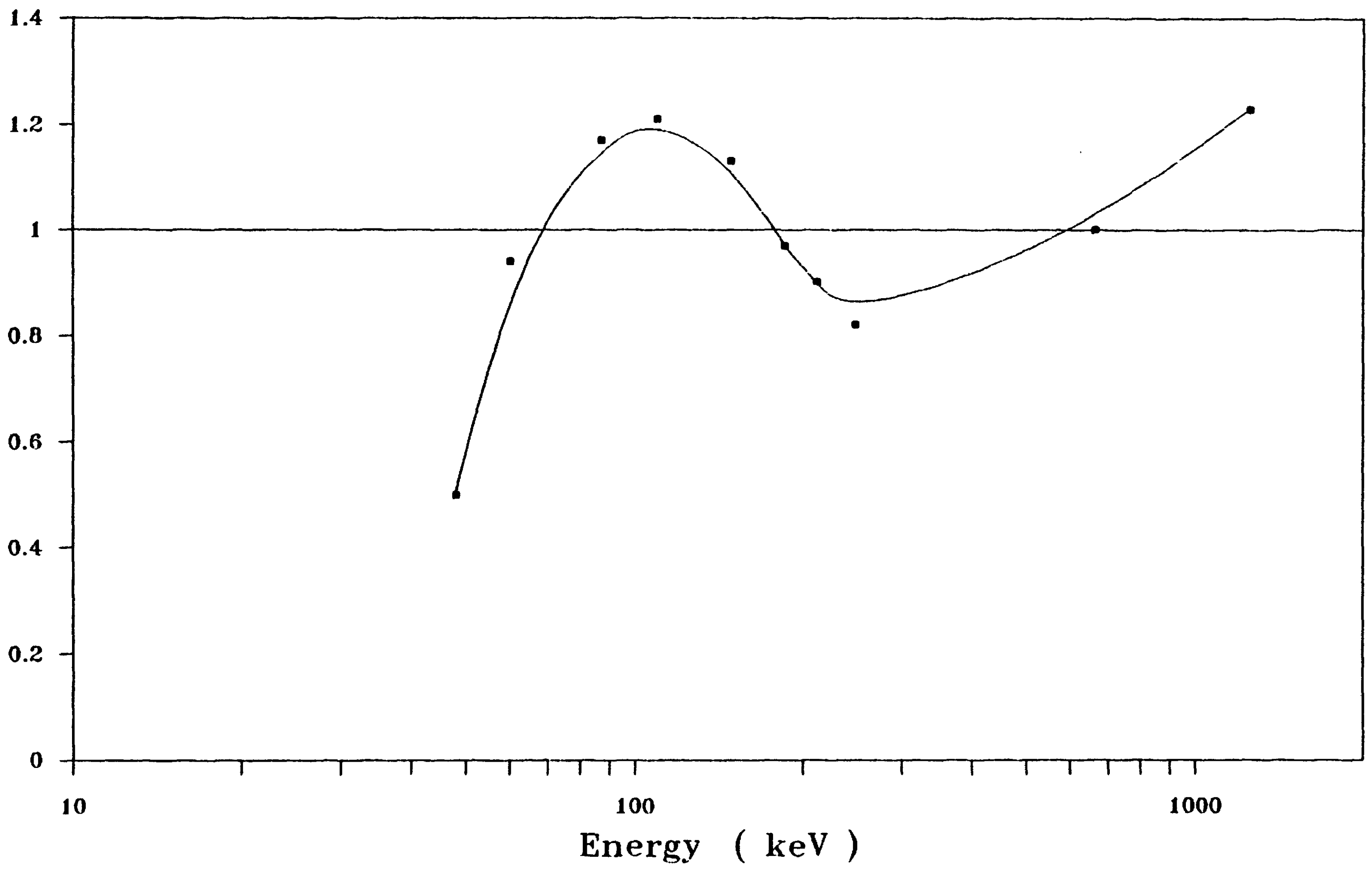

Normalised to 1.00 at 137-Cs = 16.6
Counts / s / µGy / h to air in air

FIG. 8

Mini 6-80 with MC 71 probe.
(Connector at 90° right)

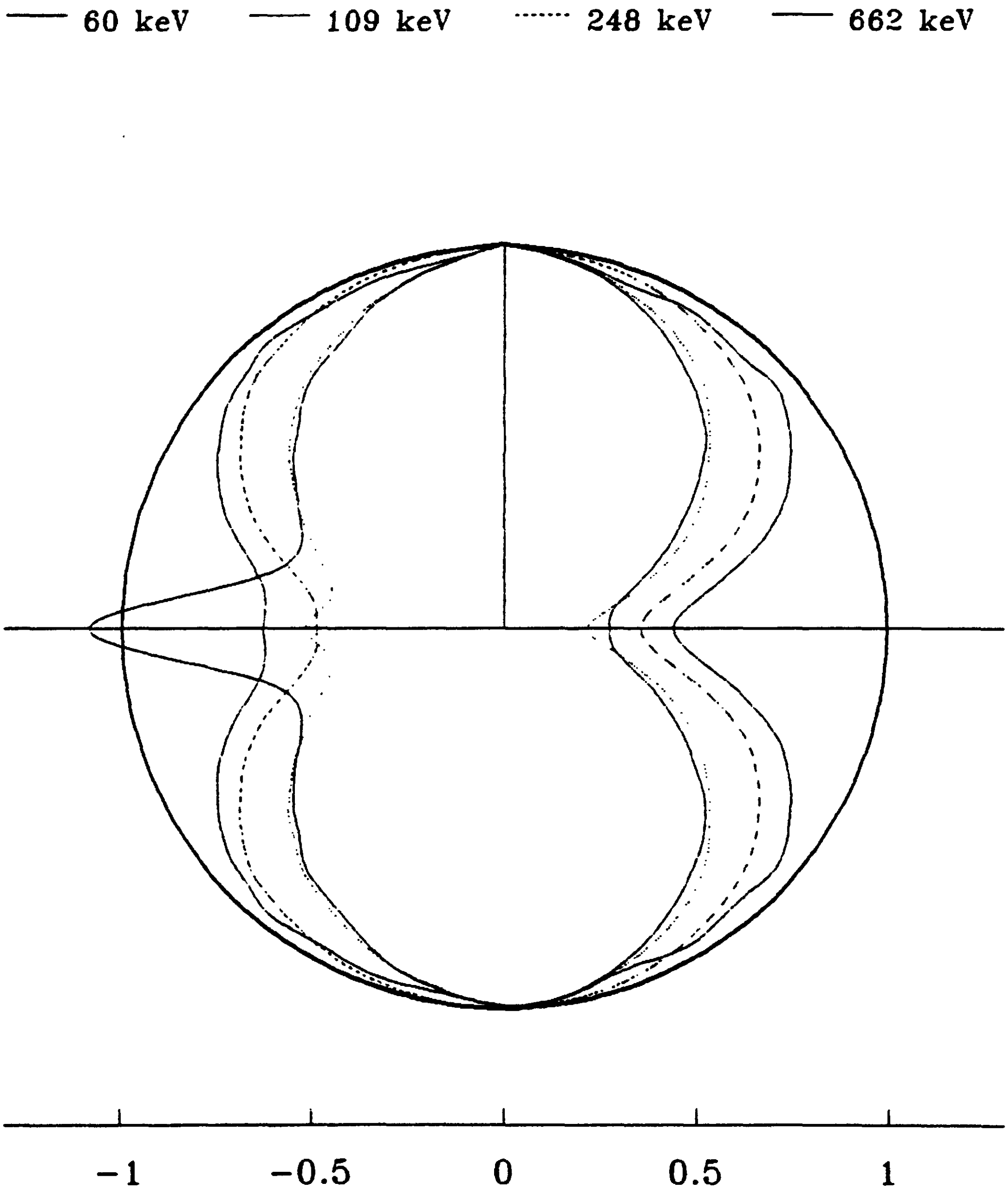

FIG. 9

Energy Response
MAB 605

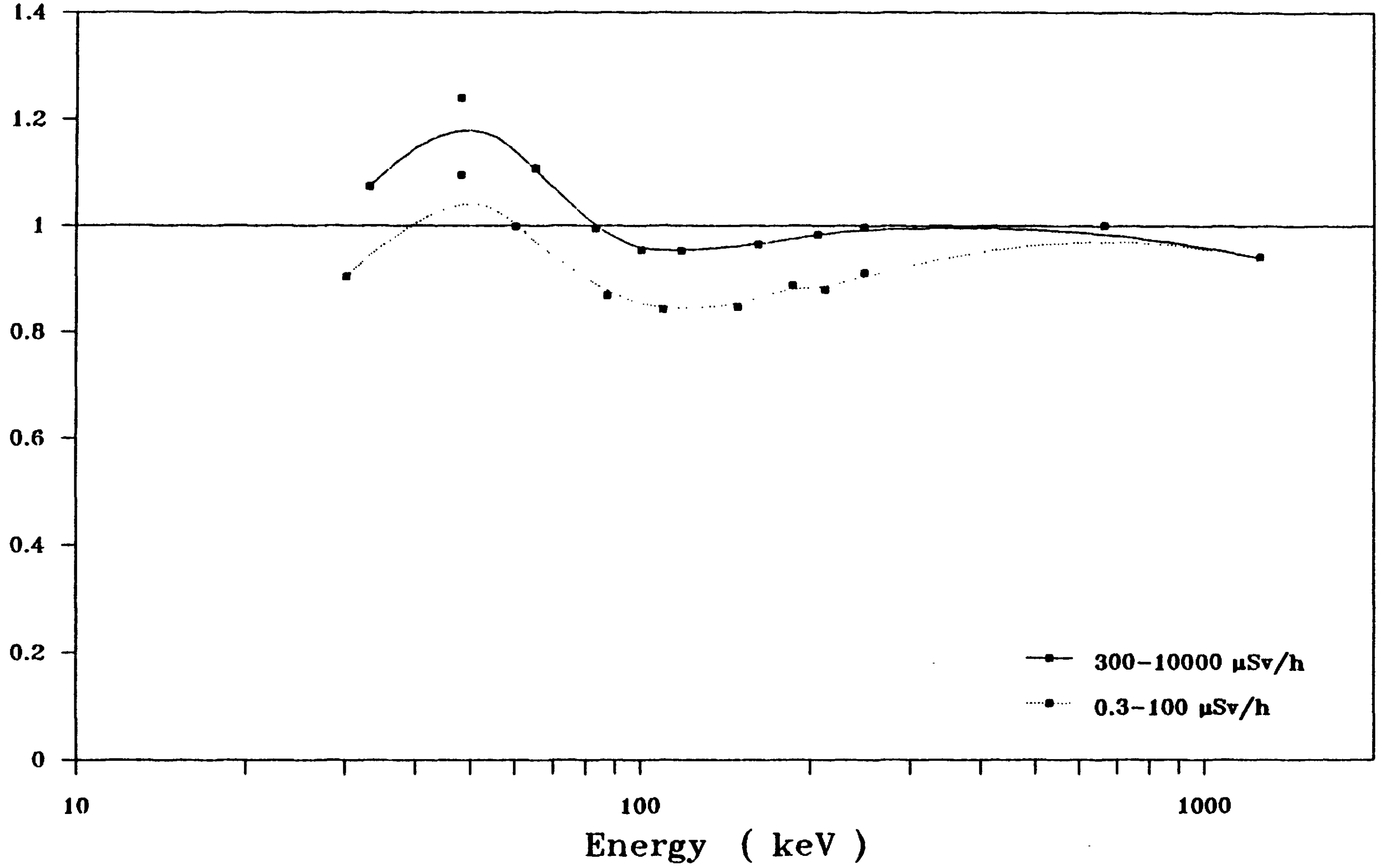

Normalised to 1.00 at 137-Cs
Low Ranges = 1.20, High Ranges = 0.94

FIG. 10

MAB 605 Cap On
Handle at 90o right

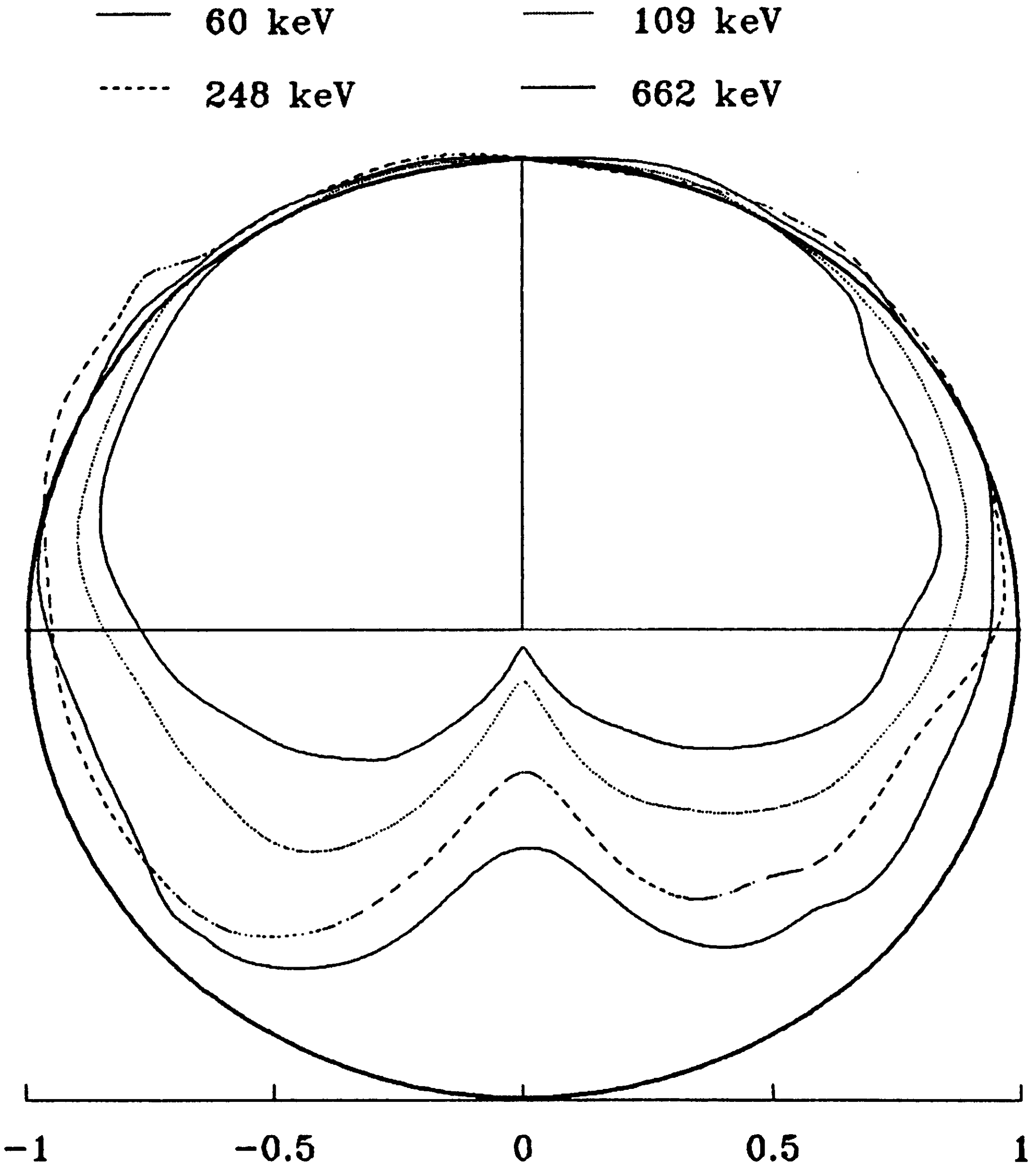

FIG. 11

Energy Response
Reuter Stokes RSS-112

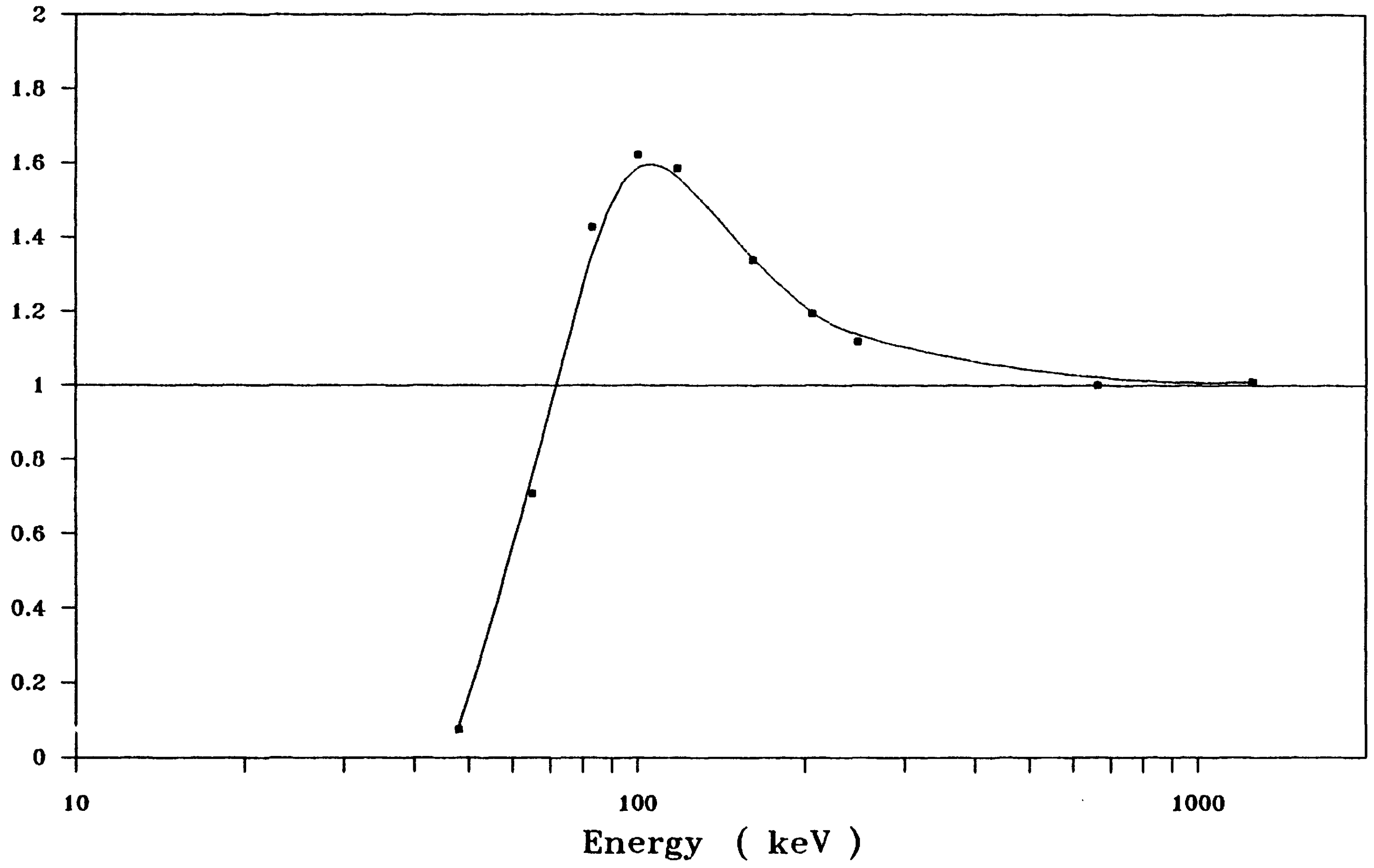

Normalised to 1.00 at 137-Cs = 0.92
mR / h / mR / h

FIG. 12

Reuter Stokes RSS-112
Horizontal (Label at 0°)

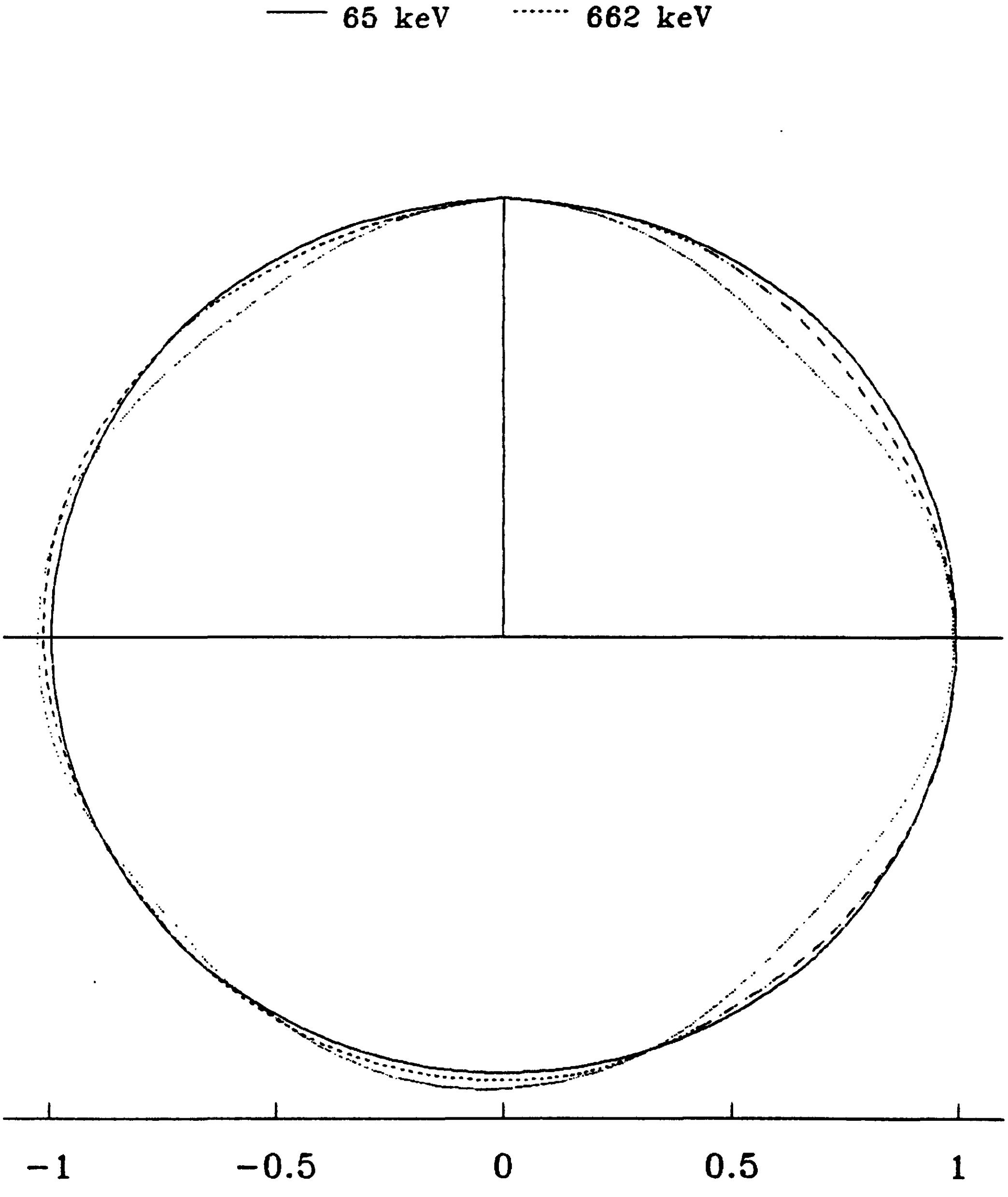

FIG. 13

Reuter Stokes RSS−112

Vertical (Feet at 0°)

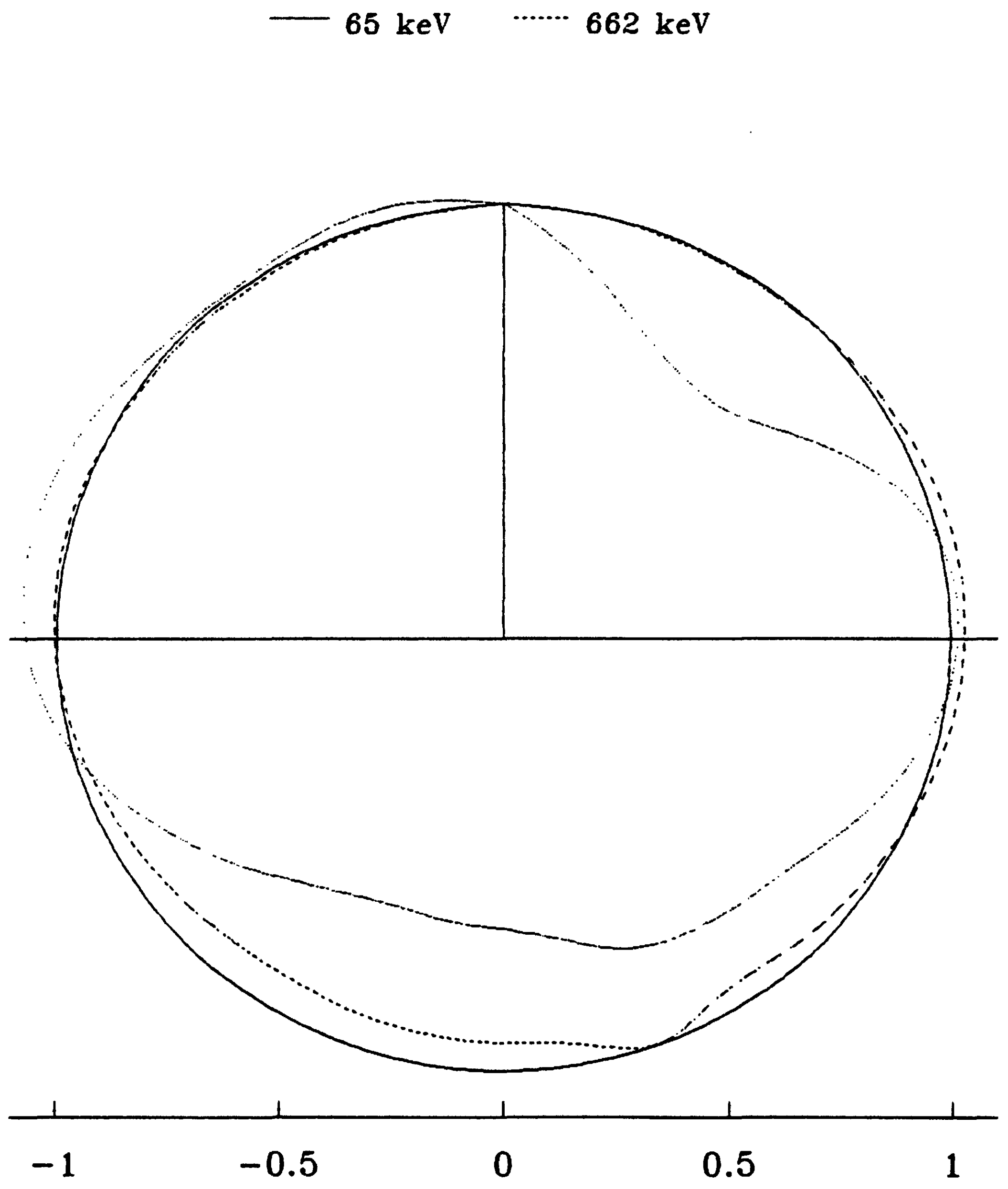

Appendix B

Compilation of Data from Field Measurements

Table 1

Sites and Weather

Site Description	Source of artificial radionuclides	O S Grid reference	Weather		
			Temperature (°C)	Wind	Rain
Brick terrace house	-	SU408 882	18	indoors	
Garden	-	SU408 883	8	calm	dry
Limestone area	-	SK175 808	5	1	snow on ground
Organic soil on rock	Chernobyl	SD165 988	5	6	heavy
Deep boggy moorland	Chernobyl	SD177 967	6	4	showers
Sandy, pebbly beach	Sellafield	NY037007	8	2	dry
Silt estuary	Sellafield	SD083 967	5	2	drizzle
NRPB shielded steel room	(1)	SU473 865	18	indoors	

(1) This is a low background room heavily shielded with low activity steel plate. The radiation field inside is almost all relatively penetrating cosmic radiation as environmental γ radiation and the less penetrating cosmic fraction are heavily attenuated.

Table 2

Summary of measured doserates (nGy h^{-1})

Site	Automes Szintomat 6134A	Bicron	Mini 6-80		MAB-605	RS-112
			^{226}Ra	^{137}Cs		
(a) brick terrace house	93	73	120	142	*	125
(b) garden	47	36	63	75	*	69
(c) limestone area	73	60	93	111	82	97
(d) organic soil on rock	85	78	108	129	101	121
(e) deep boggy moorland	67	56	72	86	72	86
(f) sandy pebbly beach	105	88	114	135	121	126
(g) silt estuary	271	146	177	210	*	215
(h) NRPB shielded room	17.5	14.1	21	24	22	24

* The MAB instrument had failed because of a damaged battery charging lead and associated blown fuse, which could not be repaired in the field.

Table 3

Time Taken To Perform A Measurement of the Dose Rate In A Low Natural Background Area To A Statistical Uncertainty of 10% (2σ)

Instrument	Time (s)	Comment
Szintomat	360	Based on an increment in the dose register of 0.01 μSv
	250	Based on the dose rate function
Bicron	200	Based on the average of 10 readings at 20 s intervals
Mini 6-80	600	The lowest preset counting time which satisfies the criterion
MAB	150	Based on an increment of 5 nSv
	250	Based on the dose rate function
Reuter Stokes	1005	

Table 4

Indication

Instrument	Quantity	Units	Additional information required
Szintomat	Dose equivalent (exposure)	0.01 μSv	external timer or method of averaging
Bicron	Dose equivalent (ambient)	0.01 μSv h^{-1}	method of averaging
Mini 6-80	Counts	counts/600	calibration factor
MAB	Dose equivalent (exposure)	1 nSv	external timer or method of averaging
Reuter Stokes	Exposure	0.1 μR h^{-1}	none

Table 5

Display Visibility

Instrument	Display	Visibility	
		Strong sunlight	Overcast
Szintomat	(1) dose: LED digital (2) rate: moving coil analogue	poor good	good adequate
Bicron	moving coil analogue	very good	good
Mini 6-80	(1) counts: liquid crystal digital (2) rate: moving coil analogue	very good good	adequate adequate
MAB	(1) dose: LED digital (2) rate: moving coil analogue	poor very good	good good
Reuter Stokes	liquid crystal digital	good	poor

Table 6

Other Equipment Required

Instrument	Equipment required
Szintomat	Timer or calculator (averaging)
Bicron	Calculator (averaging)
Mini 6-80	Calculator (using calibration factor)
MAB	Timer or calculator (averaging)
Reuter Stokes	None

Table 7

Ease of Setting-up

Instrument	Process	Estimated time (s)	Problems
Szintomat	Erecting tripod, not supplied, removing probe from instrument body and clamping to the tripod	100	Requires specially fabricated probe to tripod clip. Cable very short.
Bicron	Hold the instrument 1 m above ground level	30	None
Mini 6-80	Erecting tripod, fitting probe clip, ratemeter carrier, connecting cable to probe and ratemeter, clipping probe to clip and hanging ratemeter on clip	100	None
MAB	Erecting tripod, not supplied, removing probe and ratemeter from case, clamping probe to tripod and connecting two cables	200	Requires specially fabricated probe to tripod clip. The cables are difficult to connect.
Reuter Stokes	Erecting tripod, fixing detector	300	Awkward cable connectors, heavy detector, awkward detector to tripod fixing

Table 8

Packing and Unpacking Instrument

Instrument	Packing	Time (s)
Szintomat	Box	30
Bicron	None	0
Mini 6-80	Medium size case	60
MAB	Aluminium box	60
Reuter Stokes	Box for detector and soft case for the ratemeter and accessories	120

Table 9

Rain Resistance

Instrument	Exposed connectors	Ease of keeping connectors dry	Ratemeter sealing
Szintomat	None or 2	can be permanently fixed	Good
Bicron	None	-	Good
Mini 6-80	2	Easy	Good - close to waterproof
MAB	4	Difficult	Poor
Reuter Stokes	2	Difficult	Good, with cover closed*

* Access to controls and display requires the opening of a cover. This expresses poor sealing along one edge of the battery access.

Table 10

Wind Resistance

Instrument	Stability on tripod	Likelihood of damage by tipping onto grass
Szintomat	Poor if the probe is mounted pointing down without an extra balance weight	Possible damage, not easy to protect further
Bicron	Best held in the hand or clipped to tripod with elastic straps	Robust, but not easy to protect further
Mini 6-80	Good	Possible, in standard form, but the probe can easily be given additional protection
MAB	Poor, if the probe is mounted pointing down without an extra balance weight	Possible damage, not easy to protect further
Reuter Stokes	Very good	Unlikely event, but could easily damage detector to tripod mounting if it occurs

Table 11

Cost

Instrument	Approximate cost (UK) £
Szintomat	9000
Bicron	1200
Mini 6-80	624
MAB	
Reuter Stokes	7000

Table 12

Battery Life in Field Conditions

Instrument	Life (hours)	Battery Type	Battery Availability	Ease of Charging
Szintomat	62	R20	Everywhere	Very
Bicron	76	6LR61	Everywhere	Very (Spare in instrument)
Mini 6-80	>460	R14	Everywhere	Very
MAB	18	Sealed lead-acid rechargeable	-	Easy
Reuter Stokes	135	Sealed lead-acid rechargeable	-	-

Table 13

Weight and Volume

Instrument	Weight of complete kit (kg)	Approximate volume (1)	Comment
Szintomat	5*	10*	-
Bicron	1.4*	5*	Very portable
Mini 6-80	3	15	Very portable
MAB	7*	18*	-
Reuter Stokes	19	40	Cumbersome, occupies large volume

* excluding any tripod used in the measurements.

Table 14

Obtrusiveness and Curiosity Value

Instruments	Comments
Szintomat	Bright colour
Bicron	Unobtrusive
Mini 6-80	Unobtrusive, easily mistaken for road survey equipment
MAB	Fairly unobtrusive
Reuter Stokes	Large and obtrusive

Table 15

Data from the MAFF/NRPB Cs Monitor

Site	Mini 6-80 Doserate (nGy h^{-1})		MAFF/NRPB Cs Monitor Counts/1000s		
	^{226}Ra	^{137}Cs	Channel A (600-900 keV)	Channel B (900-1200 keV)	Ratio A/B
(a) brick terrace house	120	142	7404	4450	1.7
(b) garden	63	75	3030	1456	2.1
(c) limestone area	93	111	5400	2318	2.3
(d) organic soil on rock	108	129	13200	2215	6.0
(e) deep boggy moorland	72	86	8000	880	9.1
(f) sandy pebbly beach	114	135	27700	2880	9.6
(g) silt estuary	177	210	12840	3050	4.2
(h) NRPB shielded room	21	24	197	59	3.3

V. AN ASSESSMENT OF RAPID METHODS OF RADIONUCLIDE ANALYSIS FOR USE IN THE IMMEDIATE AFTERMATH OF AN ACCIDENT

N Green and B T Wilkins

Environmental Investigations Group
National Radiological Protection Board
Chilton
Didcot
Oxon OX11 ORQ
United Kingdom

1 Introduction

In the immediate aftermath of an accidental release of radionuclides into the environment, measurements of activity concentrations of individual radionuclides are required rapidly as a basis for decisions on the need for countermeasures. For accidental releases from nuclear power plants, most of the radionuclides of potential radiological importance emit γ-rays and so their activity concentrations can be determined directly with the minimum of sample preparation, while others such as strontium-89 and -90 and the actinides require radiochemical separation prior to measurement. Releases of actinides alone might occur following the re-entry of an isotope-powered satellite or an accident at a reprocessing plant, while strontium-90 was the principal radionuclide released after an explosion in a tank of treated effluent at Kyshtym in the USSR in the 1950s. For any accidents involving a release of radionuclides into the environment, there will be a need for at least some radiochemical analyses to be carried out. If, at an early stage, activity concentrations of strontium-89, -90 and the actinides in the deposition can be shown to be small compared to the values for γ-ray emitting radionuclides such as caesium-137, then the commitment of large amounts of effort to radiochemical analysis can be avoided. As an example, in 1986, the Risø National Laboratory obtained an engine filter from a ship that had sailed through the cloud of contamination from Chernobyl. They also collected dust from a lorry that had returned from the Ukraine just after the accident. This type of sample was of little direct use for dose assessment purposes but did allow the radionuclide composition of the Chernobyl deposit to be determined. The analyses showed that the proportions of strontium-89, -90 and actinides were small compared to iodine-131 and caesium-134 and -137(1) and so subsequently effort could be concentrated on measurements of γ-ray emitting radionuclides.

For many years, the trend in environmental radionuclide analysis has been towards improvements in sensitivity, i.e. the detection limits that a particular procedure can achieve. Consequently, many procedures currently employed for the determination of α- and β-particle emitting radionuclides are protracted and labour-intensive. Such procedures are therefore not well-suited to the circumstances encountered in the immediate aftermath of an accident. Furthermore, the selectivity of these procedures, i.e. their ability to differentiate between radionuclides, may not be adequate for the complex mixture of radionuclides that could be released. In the development of methodology for application in the event of an accident, the selectivity of the procedure and the speed with which it can be completed are important considerations. However, activity concentrations at which countermeasures or restrictions might be imposed are high compared to the detection limits that many techniques can achieve, and therefore sensitivity is not an important factor. This report sets out the methodological arguments which should be considered when developing radiochemical separation procedures for use in the immediate aftermath of an accident. The radionuclides considered were strontium-89 and -90, alpha-particle emitting isotopes of plutonium and curium and americium-241 since these could be of primary radiological importance. Others which might be released under various accident scenarios are set out in a recent report by the International Atomic Energy Agency (IAEA)(2). The procedures set out in Appendix 1 of this report are those that this laboratory would employ in the event of an accident, but this does not imply that other laboratories are obliged to adopt them. Instead, the methodological arguments used in the development of these procedures should be applied to individual circumstances. A laboratory should be free to adopt any procedure, with the proviso that it has been adequately validated in advance. The immediate aftermath of an accident is not a time to begin the development of novel procedures.

The information used in this project was gathered from the literature and by seeking opinions from established radioanalytical laboratories in Europe, Scandinavia and the USA. The contributions from those who responded are acknowledged in Section 10. The most promising procedures have been tested in the laboratory and these evaluations are described in detail later in this report.

2 Objective of the sampling and measurement programme

In the aftermath of an accidental release, the underlying objective should be to make measurements that can be used to estimate the doses that people could receive. Consequently, protocols for the collection of different environmental materials can be specified. It is not the intention in this report to discuss methods of sample collection, but the protocols that the Board considers appropriate are described briefly in Appendix 2. The purposes for which each material is collected are summarised in Table 1, since these may also affect the way in which the sample is treated and subsequently analysed.

3 Role of the measurement laboratory

In the event of a release of activity to atmosphere, samples of airborne activity are likely to be the first type of material received by the measurement laboratory. When the plume of contamination has passed, samples of grass, soil and rainwater will begin to arrive. The primary objectives should be: to establish the composition of the contamination so that analytical effort can be deployed more effectively; to determine activity concentrations in air or amounts of deposited activity so that predictive models can be used to make an early evaluation of radiological impact. Predicted values in foodstuffs such as vegetables and milk will be supplanted by measurements within 24-48 hours. Above-ground vegetables will be contaminated immediately via direct deposition of activity, whereas peak activity concentrations in milk after a single deposition event will not be reached until a few days later. After the Chernobyl accident in 1986, the time between deposition and maximum concentration in milk was about 2 days for iodine-131 and caesium-137(3), while predicted peak values for strontium-89 and -90 occur at about 5 days(4). However, restrictions on the distribution of milk or vegetables take time to implement. The measurement laboratory will therefore be called upon to generate results from both direct measurements and radiochemical analyses on a wide range of materials within 24 hours of the deposition occurring.

4 Specification of detection limits

From the analytical viewpoint, in the United Kingdom the most demanding limits on activity concentrations are those which would be imposed on foodstuffs by the Commission of the European Communities (CEC). These limits are summarised in Table 2. The evaluation in this report was carried out on the premise that a suitable procedure should be able to achieve detection limits in foodstuffs of 10 Bq kg^{-1} fresh weight for strontium-89 and -90 and 1 Bq kg^{-1} fresh weight for americium-241 and alpha-emitting isotopes of plutonium and curium. These values are more than an order of magnitude lower than those given in Table 2.

For other materials, the most restrictive values given in reference 4 for various countermeasures have been used to calculate corresponding activity concentrations. The calculated values are for the purpose of this project only; they cannot be accorded the status of Derived Levels. For airborne particles, the integrated activity concentrations at which sheltering would be considered have been taken with the assumption that a release persists for 4 hours. This enables average activity concentrations to be calculated, and these are also shown in Table 2. The detection limits which procedures should achieve to be considered suitable were then chosen to be 1 10^4 Bq m^{-3} for strontium-89, 1 10^3 Bq m^{-3} for strontium-90 and 0.5 Bq m^{-3} for actinides, which are at least an order of magnitude lower than the values given in Table 2. The assumptions used in the calculation of values for the remaining materials are given in footnotes to Table 2.

5 Sample collection and preparation

Under normal circumstances, the sample sizes required to make meaningful measurements are large. For foodstuffs and vegetation, the mass of sample required is often of the order of several kilogrammes fresh weight. The sample sizes required to achieve the detection limits specified in section 4 are much less, and can be estimated from appropriate instrumental detection limits together with cautious assumptions about chemical recovery. These values are set out in Table 3. However, collection of samples of this size directly from the field would be most unlikely to produce results that were adequately representative. Suitable sample sizes for different materials are given in Appendix 2. Consideration then has to be given to producing a uniform distribution of activity throughout the sample.

5.1 Homogeneity

A common practice under normal circumstances would be to carry out direct measurements by γ-ray spectrometry on as large a sample as possible and then to take the same sample into solution for radiochemical analysis. Subsequently, different radionuclides would be determined either from a sequential analytical procedure or from an aliquot of the solution. By these means, problems of inhomogeneity can be avoided. However, this approach would not be suitable in the aftermath of an accident because a γ-ray spectrometry facility would be under extreme pressure and there might be a considerable delay before the sample was returned to the chemistry laboratory. In an emergency, different analyses need to begin as soon as possible after the sample has been received. Consideration should therefore be given to ways in which the activity can be distributed uniformly throughout the starting material so that sub-samples of the material itself can be used. The chosen method should be able to accommodate the total amount of material collected to ensure that resultant measurements are adequately representative.

Liquid samples pose no problems with regard to homogeneity, since these can be well-mixed simply by shaking before aliquots are removed. Attention is however drawn to liquid samples containing suspended solids. In these cases it may be necessary to filter the samples and treat the solid phase separately (see Appendix 2 section 4).

After an accidental release of radionuclides to atmosphere, the resultant distribution of activity in certain types of vegetables is most unlikely to be uniform. Methods must therefore be found which can mix about 1 kg of fresh vegetation adequately. Liquidising was considered, since this would produce a sample for which homogeneity could be assured. However, the next step of any analysis involving radiochemistry would be dry ashing in a furnace to destroy organic material and liquidised samples would take longer to ash. The preferred method is to use a food processor to chop the starting material finely and then to mix the sample mechanically. The capacity of domestic food processors is in the range 1-2 litres, while those used in the catering industry can accommodate 3-5 litres. Domestic versions are the more readily obtainable, but their capacities are unlikely to be sufficient for all types of vegetation.

Soils are amenable to mechanical mixing after they have been allowed to dry in air for a few hours at room temperature. Only after mixing should a portion of the sample be taken to determine the ratio of oven dry weight to air dry weight. This portion should not be used for any subsequent radionuclide analysis because of the possibility of loss of volatile radionuclides during oven drying.

Air filters are an exceptional case, since we have found that the activity may not be distributed uniformly across the whole filter. For this reason, cutting the filter into sections for different analyses is not recommended, and γ-ray spectrometry must be carried out on the entire sample prior to radiochemistry. However, air filters are likely to be among the first samples received after an accident, and since the data they provide form the basis for early predictions of radiological impact, they should be given priority for γ-ray spectrometry. Counting times for direct measurements are likely to be short, of the order of 30 minutes, and so there need not be an inordinate delay before radiochemical analysis can commence.

6 Sample pretreatment

6.1 Foodstuffs and vegetation

Under normal circumstances, several kilogrammes of foodstuffs and vegetation may be required in order to make meaningful measurements. Consequently, one of the most time-consuming parts of the analytical procedures is the drying and ashing process, which may take several days or even weeks to complete. The merits of various methods of rapid drying and ashing have therefore been evaluated, based on the sample sizes given in Table 3.

Methods of drying that are in common use include heat lamps, conventional and microwave ovens, furnaces and freeze-driers. Of these, freeze-driers are relatively slow and the capacity of microwave ovens is limited even when using small sample sizes. Samples of vegetation are not amenable to drying by heat lamps, and with liquids such as milk there is a danger of spattering with the consequent problems of loss of determinand and potential cross-contamination. Conventional ovens and furnaces provide the most convenient means of drying large numbers of samples simultaneously.

Ashing can be achieved by either wet or dry techniques, or a mixture of both. For wet ashing, samples are simmered in an acid solution. The procedure requires occasional supervision, and would occupy space in fume cupboards which could be used more profitably for other stages of radiochemical analyses. Milk has been ashed by drop-wise addition into either boiling concentrated nitric acid(6) or into a red-hot steel crucible(7). The disadvantage of the nitric acid method is that the volume of sample which must subsequently be taken to dryness is large and as a result ashing is often incomplete. The red-hot crucible procedure requires continued supervision in order to achieve a high throughput of samples.

The most attractive procedure combines the processes of drying and ashing and makes use of a muffle furnace. In one study, up to 500 g of foodstuffs, including milk, were ashed without prior drying(8). The samples were placed in a preheated oven in stainless steel trays. Such receptacles are not in common use, and so as part of this project the utility of the technique has been investigated using borosilicate beakers.

Samples were introduced into a muffle furnace which was already established at 500° celsius. Rapid ashing could be carried out provided that beakers of 2 litre volume were employed. If in addition borosilicate watch glasses were placed on top of each beaker, loss of sample by spattering could be avoided. Ashing was completed more quickly if the samples were removed after about 90 minutes, cooled, wetted with concentrated nitric acid and returned to the furnace. For milk samples of up to 100 ml, a further 30 min in the furnace then produced a residue that readily dissolved in concentrated nitric acid. For grass and vegetable samples, a further 2-2½ hours were required for sample sizes of 50 g fresh weight. The vegetables tested in this evaluation were carrot to represent dense root crops and cabbage to represent leafy vegetables. For both carrot and cabbage, coarsely-grated or sliced material ashed more rapidly than that which had been finely grated, probably as a result of better air circulation within the coarser material. However, it is difficult to ensure adequate mixing of coarsely-grated or sliced material to achieve homogeneity, and so on balance the finely-grated material is recommended. For all the materials tested, it was possible to omit the nitric acid treatment if ashing could be continued overnight (more than 12 hours). However, this luxury may not be available in the aftermath of a major accident. The values shown in Table 4 therefore refer to procedures that include treatment with nitric acid.

6.2 Soil

From Table 3, a sample size of only 5 g is required for individual radionuclide analyses. In the circumstances that will prevail after an accident, it is unlikely that there will be time to ensure that such a small aliquot is truly representative. However, ashing times for soil samples of up to 50 g are short, typically 2 hours, and in most cases no treatment with concentrated nitric acid is required. The exceptions would be soils with a high organic content, such as woodland soils or peats. It is therefore recommended that soils be ashed and subsequently leached in 50 g quantities and appropriate aliquots taken from the resultant solution.

6.3 Air filters

The filter material could be polycarbonate, polystyrene or glass fibre. It is not recommended that the rapid ashing technique applied to vegetation should be used for air filters made of organic material, since this can result in flaring and the consequent loss of sample and determinand. The filter material will normally have been compressed into a standard geometry for γ-ray spectrometry, and returned to the chemistry laboratory after measurement. Compressed filters are not amenable to wet ashing techniques. The recommended procedure is that which is applied in normal circumstances, that is, a slow increase in temperature over several hours to a maximum of 450-500° celsius. Ashing should be completed within 24 hours. One of the purposes of collecting activity associated with airborne particles is to assess doses from inhalation. It is essential therefore that all the particulate material is completely dissolved. This will require the use of hydrofluoric acid, and the presence of fluoride ion in the resultant solution must be taken into account in the subsequent radiochemical isolation of plutonium. (Section 8.1).

Glass fibre filter papers do not normally require ashing. Instead they are dissolved using hydrofluoric acid. The residue is taken into solution by repeated treatment with hydrofluoric and nitric acids. Again, the fluoride ion present in the resultant solution must be taken into account in the subsequent radiochemical isolation.

7 Radiochemical isolation

7.1 Strontium-89, -90

At the activity concentrations encountered under normal circumstances, strontium-90 is determined from the decay of its daughter yttrium-90 after a period of ingrowth of about 3 weeks. Such a procedure is clearly unacceptable for the purposes of emergency response. Furthermore strontium-89 may also be present, as well as other fission products which also decay via beta-particle emission. A suitable method must therefore be able to isolate radiostrontium and be able to differentiate between strontium-89 and -90.

Ion-exchange chromatography has been used extensively in the past,(9-14), but in most cases, the sample solution required chemical manipulations before it could be applied to the ion-exchange column. In one instance, milk was applied directly to an ion-exchange column(12), but several steps were required after elution to produce a sample suitable for counting. Moreover, other workers have found great difficulty in passing milk through such columns, although simply stirring the milk and resin together may be a useful alternative(15). On balance however, the number of steps required either before or after ion exchange suggested that the procedure was not well-suited to the response required after an accident.

Several methods that make use of solvent extraction have also been published(16-21). Most of these methods utilise macrocyclic or crown ethers, although other complexing agents such as di(2-ethylhexyl) phosphoric acid and thenoyltrifluoroacetone have been used. Crown ethers are expensive and unstable, and their use in an emergency is not recommended unless they are already employed under normal circumstances. Some of the other extractants require long settling times before the phases separate, and most require additional chemistry before the extraction can begin. Unless such techniques are already in use, the solvent extraction method is not considered suitable for use after an accident.

The isolation of strontium as nitrate in fuming nitric acid is a commonly used procedure whose specificity has been thoroughly evaluated(22). Barium has been found to be the only significant interfering ion, so that in the event of an accident barium-140 would be a possible contaminant. However, barium can be conveniently removed by redissolving the precipitate and adding chromate: barium then precipitates, leaving strontium in solution. This method is relatively simple and rapid, and is considered the most appropriate to adopt in the event of an emergency.

7.1.1 Chemical recovery

Under normal circumstances, chemical recovery would be estimated using the γ-ray emitting isotope strontium-85. However, in an emergency, it is likely that a γ-ray spectrometry facility would already be fully occupied. Unless a gamma-counter is available, it is therefore recommended that chemical recovery should be estimated gravimetrically. After the initial dissolution of the starting material, a known mass of strontium, as nitrate, should be added. At the end of the radiochemical isolation, strontium can then be precipitated as carbonate in a scintillation vial (see Section 7.1.2) dried and weighed.

7.1.2 Measurement

The final sample may contain strontium-89 as well as strontium-90. Once the strontium is isolated, counting should proceed quickly in order to avoid problems due to the ingrowth of the decay product yttrium-90. The two strontium isotopes can be determined separately using a Geiger counter and differing degrees of attenuation or by more modern gas flow proportional counters(23). However, the liquid scintillation technique has been used most extensively(22,24-31). Such instruments are widely available and permit large numbers of samples to be counted automatically. They are therefore the preferred instrument for emergency response. The precipitate from the radiochemical isolation procedure can be dried and weighed in the vial to be used for counting (Section 7.1.1). The precipitate can then be dissolved in dilute nitric acid, taken to dryness and then redissolved in 2 ml of distilled water. The use of a scintillation vial as a reaction vessel is not new but it is useful to note that the commercial plastic vials that are now in common use are able to withstand prolonged heating at 110° celsius and centrifugation.

Using a liquid scintillation counter, strontium-89 can be determined directly in aqueous solution from the emission of Cerenkov radiation. After the addition of a suitable liquid scintillant, the sample can be recounted and the strontium-90 content estimated. Methods of calculating strontium-90 content in the presence of strontium-89 have been published(31). For reactor accidents, strontium-89 activity concentrations are likely to exceed those for strontium-90. In the release from Chernobyl, the isotopic ratio was about 20(1). In order to minimise problems due to ingrowth of yttrium-90 ($T_{\frac{1}{2}}$, 64 hours), it is recommended that batch sizes do not exceed 6 samples and that delay between the final separation of yttrium-90 from its parent and start of counting is minimised.

This analytical technique, which is based on that described in reference 25, is described in detail in Appendix 1. The times taken to complete different stages of the procedure are summarised in Table 4.

7.1.3 Method validation

The proposed method has been tested for milk and water. Known amounts of strontium-89 and -90 were added to appropriate volumes of each material, the activities being chosen to give strontium-89: strontium-90 ratios of 1:1 and 20:1. Radiochemical isolation was carried out according to the procedure in Appendix 1 and the activities in the final samples determined using a liquid scintillation counter. Counting efficiencies in the Cerenkov region were 36% and 1.5% for strontium-89 and -90 respectively; both the corresponding values for the liquid scintillation count approached 100%. Chemical recoveries, which were estimated gravimetrically, were typically 85% for water and 75% for milk. The results are shown in Table 5. In most cases, the measured activities were within ± 5% of the nominal values. The exceptions were the strontium-90 determinations when the isotopic ratio was 20:1, for which the nominal values exceeded the measured activities by 10-20%. Such differences are outside the bounds of the counting uncertainties but are considered acceptable for the purposes of emergency response.

For strontium-89, the instrumental minimum detectable activity calculated at the 95% confidence level was 0.12 Bq, based on a counting time of 20 minutes and using the Cerenkov region. For a 50 g sample of starting material and a chemical recovery of 50%, this corresponds to an activity concentration of 5 Bq kg^{-1}. Minimum detectable activities for strontium-90 are dependent upon the ratio of the two isotopes. With a strontium-89: strontium-90 activity ratio of 20 and a counting time of 20 minutes, the minimum detectable activity of strontium-90 at the 95% confidence level was 0.22 Bq. This corresponds to an activity concentration of about 9 Bq kg^{-1} for a 50 g sample of starting material and a chemical recovery of 50%. The detection limit improves as the isotopic ratio decreases. Typical detection limits for different materials are summarised in Table 3.

7.2 Determination of actinides

7.2.1 Radiochemical isolation

Inspection of compendia of analytical procedures such as reference 7 illustrates the different approaches that can be taken to the radiochemical isolation of alpha-emitting isotopes of plutonium, americium and curium. However, all of the procedures are relatively complex and none offer any particular advantages in terms of speed. This view was endorsed by the respondents to our enquiries to established laboratories around the world (see for example reference 32). The general recommendation with regard to actinide analyses is therefore that laboratories should keep to their own established, validated methods. However, consideration should be given to the implications of using small sample sizes, and the possibility of analysing unusual materials and the potential use of automated equipment(33). Interference effects from the presence of stable elements in the starting material can be sensitive to sample size, and in many cases steps taken normally to remove the interference can be omitted for the sample sizes necessary in an emergency. The presence of iron in the starting material is a common example of a matrix interference effect, but with the sample sizes required for emergency response, it may not always be necessary to take steps to remove it. The analyses of materials that a laboratory does not normally encounter may also introduce analytical problems. The use of hydrofluoric acid to dissolve airborne particles has already been noted (section 6.3), together with the implications for the subsequent isolation of plutonium. Steps required to overcome this problem are well-documented(7).

Because of the recommendation that laboratories should make use of their established procedures for the determination of actinides, no detailed analytical method has been included in this report. However, the foregoing discussion suggests that some minor modifications may be necessary. It is essential that such modifications are assessed and validated as part of contingency planning and not introduced untried in the event of an accident.

7.2.2 Measurement and estimates of chemical recovery

It is essential that the isotopic composition of the deposit is determined, since this may provide a means by which the influence of the accident can be distinguished from that of earlier deposits. Furthermore, chemical recovery must be determined by the addition of alpha-emitting isotopes of plutonium and americium that are not likely to be encountered in the deposit(7). Some form of spectrometric measurement is therefore essential. Techniques based on mass spectrometry can provide such information, but the equipment required is expensive and in consequence only a few laboratories have such a capability (see for example reference 34). These techniques may still require some radiochemistry prior to measurement in order to separate isobares. Counting times are however very short so that such techniques are potentially of great use in an accident. The most commonly-available α-spectrometric technique makes use of silicon surface-barrier detectors operating *in vacuo*. To ensure good spectral quality, the radionuclides of interest must be in the form of a microlayer. Most procedures achieve this using electrodeposition(7), although coprecipitation procedures have also been used(35).

The times taken to complete these analyses are shown in Table 4. The detection limits that these procedures can achieve are shown in Table 4 and are well below those specified in Section 4. These estimates have been based on a counting time of 100 min and a chemical recovery of 30%. In practice chemical recoveries normally exceed 60%.

8 Direct measurements of plutonium and americium

High-purity germanium detectors that are capable of measuring low-energy photon emissions have become increasingly common in recent years. These have the potential to determine activity concentrations of americium from its 59.5 keV photon emission and plutonium from the X-rays emitted by its uranium decay product. Even if counting times of several hours were required, direct measurements could be of value in an emergency. The feasibility of using such measurements has therefore been evaluated. Detection limits have been estimated for plutonium and americium for two situations: a pure actinide release; a release of actinides in combination with a mixture of γ-ray emitting fission products. For the latter case, europium-152 was used to provide several γ-ray emissions over a range of energies, the activity being chosen to correspond approximately to the total γ-ray activity observed on air filters collected at the Board's laboratory after the Chernobyl accident. Detection limits were estimated for counting times of 15 and 1000 min, and were derived for a sample geometry of 90 mm diameter and 10 mm depth. This corresponds to a commonly-available petri dish which could be used for solid samples and to a typical partially-filled bottle for liquids. Larger sample configurations were not considered worthy of study because of increased attenuation of the photon emissions by the sample itself. The estimated detection limits for different materials are shown in Tables 6a and 6b. Comparison with the limiting activity concentrations in Table 2 shows that direct measurements of plutonium would only be useful for rainfall and grass, and then only if long counting times were employed. Such a practice might therefore be justified in the event of a pure actinide release, but if the accident also involved fission products, long counting times could not be tolerated. For americium, direct measurements would provide adequate detection limits for deposition on soil, in vegetation and in rainwater using counting times of 15 minutes. For airborne particles, direct methods would only be worthwhile in the event of a pure actinide release, and then only with counting times of 1000 minutes. The procedure is not suitable for foodstuffs. Laboratories having suitable equipment should therefore evaluate the determination of americium-241 by direct methods since in some circumstances these could provide an early indication of the need to consider countermeasures. However, the determination of activity concentrations from low-energy photon emissions, is complicated by both the density of the matrix and its chemical composition, since each can influence self-attenuation. Consequently, it is recommended that decisions about sample configurations, calibrations for different materials and the estimation of detection limits be made as part of contingency planning.

9 Summary and recommendations

Activity concentrations at which countermeasures might be considered or regulatory restrictions imposed are high compared to the detection limits that commonly-available measurement techniques can achieve. The detection limits that laboratories will need to achieve during a response to an accident should be specified in advance in order that sample sizes can be decided. This is of fundamental importance since the time required for ashing and dissolution is dependent on sample size.

Although the amount of sample required for analysis is much less than that taken under normal circumstances, there is still a need to ensure that the amount of starting material collected is adequately representative. For example, at least 1 kg fresh weight of vegetables should be collected. In an emergency, it is essential that different analyses proceed simultaneously, and so it is necessary to develop techniques to homogenise materials such as root crops, leafy vegetables and herbage. This is a fundamental change from the methodology applied under normal circumstances, and should be evaluated as part of contingency planning.

The rapid determination of strontium-89 and strontium-90 requires a method that is not used under normal circumstances. A published procedure has been evaluated and works well, but it should be validated by each individual laboratory before operational use. For most materials, a result can be obtained within 15 h of the receipt of the sample. It is recommended that gravimetry, or another method based on the determination of stable strontium, should be used used to estimate recovery.

Different methods of radiochemical analysis of the actinides have been assessed; none are markedly superior in terms of speed. In view of the complexity of these procedures it is recommended that, in the event of an accident, laboratories continue to use their established, validated procedures. However, there may be a need to review their applicability for smaller sample sizes or materials that are not normally encountered. For example, smaller sample sizes may enable steps to remove matrix interference effects to be omitted. This type of review should also take place as part of contingency planning. Using methods that are currently in use at this laboratory, a determination of plutonium can be completed within 20 hours of the receipt of the sample; results for americium and curium would be available about 15 hours later.

Direct measurements of plutonium via low-energy photon emissions are not likely to be of practical use except in the event of a pure actinide release. For selected materials, determination of americium by direct means can achieve detection limits that are adequate for the purposes of emergency response. However, measurements made using low-energy photon emissions are complicated by self-absorption within the sample matrix, and suitable calibration procedures must be developed as part of contingency planning.

10 Acknowledgements

This project was funded by the Commission of the European Communities. We are indebted to the following colleagues who responded so helpfully to our enquiries: A Aarkrog (Den), K Bunzl (FRG), B R Harvey (UK), K-H Hellmuth (Fin), C Hurtgen (Bel), P W Krey (USA), F R Livens (UK), J Melin (Swe), M Pimpl (FRG), F Schönhofer (Aut), H Schüttelkopf (FRG) and B B Warren (UK). We thank colleagues at our own laboratory for advice and comment, notably Dr G Etherington and Mr M Youngman who participated in the evaluation of direct measurements via low-energy photon emissions.

11 References

1 Aarkrog, A. Chernobyl debris compared with nuclear weapons fallout. J. Environ. Radioactivity 6 (2), 151 (1988).

2 International Atomic Energy Agency. Measurements of radionuclides in food and the environment. A guidebook. IAEA Tech Report Series No. 295, IAEA, Vienna (1988).

3 Wilkins, B T, Bradley, E J, and Fulker, M J. The influence of different agricultural practices on the transfer of radionuclides from pasture to milk after the Chernobyl accident. Sci. Tot. Environ. 68 161 (1988).

4 NRPB. Derived emergency reference levels for the introduction of countermeasures in the early to intermediate phases of emergencies involving the release of radioactive materials to the atmosphere. NRPB-DL10, Chilton (1986).

5 Wilkins, B T, Bradley, E J, and Dodd, N J. The effects on culinary preparation on radionuclide levels in vegetable foodstuffs. Rad. Prot. Dosim. 20 (30), 187 (1987).

6 International Atomic Energy Agency. Environmental monitoring in emergency situations. IAEA Safety Series No. 18. IAEA, Vienna (1966).

7 Sampling and measurement of radionuclides in the environment. A report by the methodology sub-group to the Radioactivity Research and Environmental Monitoring Committee (RADREM). ISBN 0 11 752261 9. HMSO, London (1989).

8 Boppel, B. Schnelle Trockenveraschung von Lebensmitteln. In Proc. of International Symposium on Rapid Methods for Measuring Radioactivity in the Environment. Neuherberg 5-9 July 1971. IAEA, Vienna (1971).

9 Talvitie, N A, and Demint, R J. Radiochemical determination of strontium-90 in water using ion exchange. Anal. Chem. 37 (12), 1605 (1965).

10 Ibbett, R D. The determination of strontium-90 in environmental materials and preferential chelation techniques. Analyst 92, 417 (1967).

11 Gregory, L P. A simplified separation of strontium, radium and lead from environmental media by precipitation followed by fractional elution. Anal. Chem. 44 (12), 2113, (1972).

12 Johns, F B, (ed). Handbook of Radiochemical Analytical Methods. EPA-680/4-75-001. USEPA, Las Vegas (1975).

13 Taipale, T K, (ed). The sampling and analysing methods of radionuclides used in the Nordic countries for environmental samples. Nordic Liaison Committee for Atomic Energy (NKA), Stockholm (1985).

14 Juznic, K, and Fedina, S. Radiochemical determination of ^{90}Sr and ^{89}Sr in soil. Fresenius Z. Anal. Chem. 323, 261 (1986).

15 Wilkins, B T, and Stewart, S P. A sensitive method for the determination of iodine-129 in environmental materials. Int. J. Appl. Radiat. Isotop. 33, 1385 (1982).

16 Borus-Bözörmenyi, N, and Kovacs, J. Bestimmung des Gehaltes an ^{90}Sr und ^{89}Sr in Proben Tierischer und Pflanzlicher herkunft. J. Radioanal. Chem. 68 (1-2), 23 (1982).

17 Yang, H. Determination of strontium-90 in environmental samples with dicyclohexyl-18-crown-6. He Huaxue Yu Gangshe Huaxue 6 (3), (1984).

18 Kimura, T, Iwashima, K, Ishimori, T, and Hamaguchi, H. Separation of strontium ion from a large amount of calcium ion by the use of a macrocyclic ether. Chemistry Letters, 563 (1977).

19 Kimura, T, Iwashima, K, Ishimori, T, and Hamada, T. Separation of strontium-89 and strontium-90 from calcium in milk with a macrocyclic ether. Anal. Chem. 51 (8), 1113 (1979).

20 Mikulaj, V, Hlatky, J, and Vasekova, L. An emulsion membrane extraction of strontium and its separation from calcium utilising crowns and picric acid. J. Radioanal. and Nucl. Chem. Articles 101 (1), 51 (1986).

21 Lapid, J, Miinster, M, Farhi, S, Eini, M, and Lalouche, L. A rapid method for the determination of radiostrontium in river water. J. Radioanal. Nucl. Chem. Letters 86 (5), 321 (1984).

22 Harvey, B R, Ibbett, R D, Lovett, M B, and Williams, K J. Ministry of Agriculture, Fisheries and Food, Directorate of Fisheries Research, Aquatic Environment Protection: Analytical methods number 5: Analytical procedures for the determination of strontium radionuclides in environmental materials. MAFF, Lowestoft (1989).

23 Kamada, H, Mita, M, and Saiki, M. Measurements of ^{89}Sr and ^{90}Sr in environmental samples by a low-background beta-ray spectrometer. In Proc. of International Symposium on Rapid Methods for Measuring Radioactivity in the Environment. Neuherberg 5-9 July 1971. IAEA, Vienna (1971).

24 Piltingsrud, H V, and Stencel, J R. Determination of ^{90}Y, ^{90}Sr and ^{89}Sr in samples by use of liquid scintillation beta spectroscopy. Health Phys. 23, 121 (1972).

25 Benzi, P, Operti, L, and Volpe, P. On the reliability of a rapid method for the determination of ^{90}Sr in natural samples. J. Radioanal. Nucl. Chem. Letters 126 (3), 245 (1987).

26 Schönhofer, F, and Weisz, J. Measurements by ultra low level liquid scintillation counting following the Chernobyl accident. J. Radioanal. Nucl. Chem. Articles 115 (1), 125 (1987).

27 Schönhofer, F, Friedrich, M, and Buchtela, K. A new simplified determination method for environmental strontium-90 by ultra low level scintillation counting. Presented at International Conference on New Trends in Liquid Scintillation Counting and Organic Scintillators. Gatlinburg, Tennessee (1989).

28 Calisto, W, Kun, A, and Campos, E. Deteccion de los niveles de contaminacion radioactiva ambiental empleando un contador de centelleo liquido. IAEA-SM-252/57, 207.

29 Randolph, R B. Determination of strontium-90 by Cerenkov and liquid scintillation counting. J. Appl. Rad. Isotop. 26, 9 (1985).

30 Carmon, B, and Dyer, A. Cerenkov spectroscopic assay of fission isotopes. 1. Assay for ^{90}Sr and ^{89}Sr in aqueous nitrate solutions in the presence of ^{137}Cs. J. Radioanal. Nucl. Chem. Articles 98 (2), 265 (1986).

31 Rucker, T L. Calculational method for the resolution of strontium-90 and strontium-89 counts from Cerenkov and liquid-scintillation counting. Presented at International Conference on New Trends in Liquid Scintillation Counting and Organic Scintillators. Gatlinburg, Tennessee (1989).

32 Schüttelkopf, H. Bestimmung von Plutonium in Probematerialen der Umgebungsüberachung. In Proc. of International Symposium on Rapid Methods for Measuring Radioactivity in the Environment. Neuherberg 5-9 July 1971. IAEA, Vienna (1971).

33 Melin, J, National Institute for Radiation Protection, Stockholm. Personal communication.

34 Hislop, J S, Long, S F, Brown, R M, Morrison, R and Pickford, C J. The use of argon plasma sources for measurements of long-lived radionuclides. ICRM Low-level techniques group meeting, Wurenlingen, Switzerland, June 1987.

35 Hindman, F D. Actinide separations for alpha spectrometry using neodymium fluoride coprecipitation. Anal. Chem 58 (6), 1238 (1986).

Table 1

Objectives of measurements of different environmental materials

Material	Objective
Airborne activity	Assess doses due to inhalation of radionuclides either after release to atmosphere or following resuspension of deposited activity Predict subsequent deposition to ground
Rainwater	Estimate deposited activity
Drinking water	Estimate intakes of activity
Surface waters	Predict consequences of use for irrigation, agriculture and fisheries
Grass	Estimate deposited activity Predict onward transfer to animal products such as milk and meat
Soil	Estimate deposited activity Predict subsequent transfer to plants
Foodstuffs	Estimate dietary intakes of activity Demonstrate compliance with statutory limits

Table 2

Limiting activity concentrations in environmental materials

Material and unit	Origin of limit$^{(1)}$	Limiting activity concentration					
		Sr-89	Sr-90	Pu-239	Am-241	Cm-242	Cm-224
Air, Bq m^{-3}	Reference $4^{(2)}$	$2.5\ 10^{5}$	$1.1\ 10^{4}$	5	5	$2\ 10^{2}$	10
Drinking water, Bq l^{-1}	Reference 4	$2.3\ 10^{5}$	$2.8\ 10^{4}$				
Rain water , Bq l^{-1}	Reference $4^{(3)}$	$1.8\ 10^{6}$	$1\ 10^{5}$	$3.8\ 10^{5}$	$3.7\ 10^{5}$		
Soil, Bq kg^{-1}	Reference $4^{(4)}$	$6\ 10^{4}$	$3.3\ 10^{3}$	$1.3\ 10^{4}$	$1.3\ 10^{4}$		
Grass, Bq kg^{-1}	Reference $4^{(5)}$	$1.8\ 10^{6}$	$1\ 10^{5}$	$3.8\ 10^{5}$	$3.7\ 10^{5}$		
Dairy produce, Bq kg^{-1}	CEC restriction	125	125	20	20	20	20
Other solid foods, Bq kg^{-1}	CEC restriction	750	750	80	80	80	80
Liquid foods, Bq kg^{-1}	CEC restriction	125	125	20	20	20	20

Footnotes

1 For the purpose of this exercise only, the most restrictive limits given in reference 4 have been used to derive corresponding limits expressed as activity concentrations. These have been calculated using very general assumptions and cannot be accorded the status of a Derived Level.

2 For air, the conversion has been based on a 4 hour continuous release.

3 For rainwater, the conversion has been based on rainfall of 1 mm depth.

4 For soil, the conversion has been based on a soil density of $1.5\ 10^{3}$ kg m^{-3} dry weight and assumes that the activity penetrates to a depth of 20 mm at the time of deposition.

5 For grass, the conversion has been based on a foliar density of 1 kg m^{-2}, fresh weight.

Table 3

Sample sizes and typical minimum detectable activities

Material	Sample size	Units	Minimum detectable activities achievable		
			Sr-89	Sr-90	Actinides
Airborne particles	1 m^3	Bq m^{-3}	0.3	0.45	0.003
Water	1 l	Bq l^{-1}	5	9	0.1
Soil	5 g	Bq kg^{-1}*	325	575	0.3
Grass	50 g	Bq kg^{-1}‡	5	9	0.1
Milk	50 ml	Bq l^{-1}	5	9	0.1
Vegetables	50 g	Bq kg^{-1}‡	5	9	0.1

Estimates of minimum detectable activity were based on the 95% confidence level

*denotes activity concentration on a dry weight basis

‡denotes activity concentration on a fresh weight basis

Table 4

Time taken for the analysis of sample batches of 6

Sample	Approximate time taken in hours				
	Ash	Determinand	Analysis	Count	Total
Air filter	24	Sr isotopes Pu isotopes Am/Cm	6 12 24	4 2 2	34 36 53
Water	0	Sr isotopes Pu isotopes Am/Cm	6 8 24	4 2 2	10 10 29
Soil	2	Sr isotopes Pu isotopes Am/Cm	6 12 24	4 2 2	12 16 31
Grass	4-5	Sr isotopes Pu isotopes Am/Cm	6 12 24	4 2 2	15 19 34
Milk	2	Sr isotopes Pu isotopes Am/Cm	6 8 24	4 2 2	12 12 31
Vegetables	4-5	Sr isotopes Pu isotopes Am/Cm	6 12 24	4 2 2	15 19 34

Table 5

Validation of the rapid method for the determination of radiostrontium

Sample	Nuclide	Chemical recovery	Activity added, Bq	Activity Measured, Bq
Milk 1	Sr-89	75.6%	101.0	104 ± 2
Milk 1	Sr-90	75.6%	104.6	101 ± 2
Milk 2	Sr-89	72.7%	807.6	841 ± 4
Milk 2	Sr-90	72.7%	41.8	37 ± 4
Water 1	Sr-89	84.6%	101.0	105 ± 1
Water 1	Sr-90	84.6%	104.6	102 ± 2
Water 2	Sr-89	83.2%	807.6	834 ± 3
Water 2	Sr-90	83.2%	41.8	34 ± 4

The quoted uncertainties represent the bounds of the 95% confidence interval.

Table 6a

Estimated detection limits for direct measurements of plutonium

	Pure actinide release		Actinide/fission product release	
	15 min count	1000 min count	15 min count	1000 min count
Vegetation*, Bq kg^{-1}	19,000	2,300	200,000	23,000
Water, Bq l^{-1}	10,000	1,300	110,000	13,000
Airborne particles, Bq m^{-3}	500	60	5,000	600
Soil, Bq kg^{-1}	21,000	2,600	220,000	26,000

Table 6b

Estimated detection limits for direct measurements of americium

	Pure actinide release		Actinide/fission product release	
	15 min count	1000 min count	15 min count	1000 min count
Vegetation*, Bq kg^{-1}	80	10	1,250	155
Water, Bq l^{-1}	25	3	360	45
Airborne particles, Bq m^{-3}	1	0.2	16	2
Soil, Bq kg^{-1}	25	3	360	45

*includes foodstuffs

Appendix 1

Proposed method of analysis for radiostrontium

1 Preliminary treatment

1.1 Air filters

1 After ashing, quantitatively transfer the residue using 8 M nitric acid to a PTFE beaker. Dislodge any stubborn particles using an ultrasonic bath or a rubber policeman and rinse at least three times with 8 M nitric acid.

2 Evaporate to dryness under an infra-red lamp.

3 Dissolve in 5 ml of 40% hydrofluoric acid and heat to dryness.

4 Repeat step 3 twice.

5 Add 10 ml of concentrated nitric acid and a few mg of solid aluminium nitrate and heat to dryness.

6 Add a further 10 ml of concentration nitric acid and heat to dryness.

7 Dissolve in a minimum volume of 8 M nitric acid.

8 If actinide analysis is to be carried out on this same sample, transfer to a suitable volumetric flask and dilute to the mark with water. Transfer half the solution to a 250 ml beaker, add an accurately known weight of strontium carrier, about 50 mg, and proceed with the purification. If actinide analysis is not to be carried out, the whole solution can be used.

1.2 Water

1 Acidify the aliquot taken with 10 ml of hydrochloric acid and dilute to about 200 ml. Add an accurately known amount, typically about 50 mg, of strontium carrier and stir.

2 Adjust the pH to 10 ± 0.5 with 5% sodium hydroxide.

3 Add 4 g of ammonium carbonate with stirring. Continue to stir for at least 10 minutes after all the reagent has dissolved.

4 Filter with suction through a No 42 Whatman paper and wash the precipitate with 5% ammonium carbonate solution. Reject the filtrate and washings.

5 Remove from suction and wet the filter paper with 8 M nitric acid to dissolve the precipitate. Reapply suction and wash through with 8 M nitric acid.

6 Transfer the solution to a 250 ml beaker and proceed with the purification.

1.3 Milk

1 Dissolve the ash in a minimum volume of 8 M nitric acid and add accurately about 50 mg of strontium carrier.

2 Transfer quantitatively to a 250 ml beaker and proceed with the purification.

1.4 Soil

1 Add 100 ml of aqua regia to the ashed 50 g of soil and digest at near boiling for 2 hours.

2 Cool and filter through a Whatman GF/B, washing with concentrated hydrochloric acid and then water.

3 Make up to a known volume in a suitable volumetric flask. Mix well. (This stock solution would also be used for the actinide analysis).

4 Place an aliquot of one tenth of the solution in a 250 ml beaker, add accurately about 50 mg of strontium carrier and evaporate to near dryness.

5 Add 50 ml of concentrated nitric acid and evaporate to near dryness again.

6 Add 50 ml of 8 M nitric acid and proceed with the purification.

1.5 Grass and vegetables

1 Digest the ash with 100 ml of concentrated nitric acid at near boiling until the residue has dissolved or for 2 hours, whichever is shorter.

2 Filter through a glass fibre filter paper, wash with 8 M nitric acid and then water. Reject the residue.

3 Transfer to a 250 ml beaker and proceed with the purification.

2 Purification of strontium

1 Evaporate on a hot plate until salting out begins.

2 Immediately add 20 ml of water.

3 Cool in an ice bath and add, with stirring, 67 ml of fuming nitric acid. Continue stirring for 30 minutes.

4 Filter with suction through a glass fibre filter paper and wash with fuming nitric acid. Reject the filtrate and washings.

5 Remove from suction and wet the precipitate with water to dissolve.

6 Reapply suction and wash through with water, keeping the volume to a minimum.

7 Transfer to a 50 ml centrifuge tube and add 20 mg of barium carrier, 1 ml of 6 M acetic acid and 2 ml of 6 M ammonium acetate solution.

8 Adjust the pH to 5.5 with dilute ammonia or dilute hydrochloric acid.

9 Heat to 90°C in a water bath, and add, dropwise with stirring, 1 ml of 0.3 M sodium chromate solution. Heat in a boiling water bath for 30 minutes.

10 Cool in an ice bath and centrifuge. Decant the supernate carefully into a clean tube and reject the precipitate.

11 Add 5 mg of ferric chloride. Mix and add concentrated ammonia solution dropwise until the solution is alkaline. Centrifuge and decant the supernate into a clean tube. Note the mid-time of the centrifugation. Reject the precipitate.

12 Add 2 g of ammonium carbonate and digest in a water bath to coagulate the precipitate.

13 Cool and transfer to a tared liquid scintillation vial, in stages as necessary, and centrifuge. Carefully decant the supernate and reject.

14 Wash with water and centrifuge. Reject the washings.

15 Dry in a drying oven at 110°C to constant weight. Record the weight of strontium carbonate to calculate chemical recovery.

16 Dissolve in 2 ml of 8 M nitric acid and heat to dryness.

17 Dissolve in 2 ml of water and count on a liquid scintillation counter at the previously determined Cerenkov settings for 20 minutes.

18 Add 10 ml of scintillant and recount at the previously determined strontium-90/strontium-89 settings. Record the mid-count time to calculate the ingrowth of yttrium-90 from step 11.

Appendix 2

Sample Collection

The collection of samples is an important aspect of any monitoring programme, since no amount of analytical effort can redress the problem of an inappropriate sample. The way in which a sample is collected and treated depends upon the objective of the measurement programme. After an accident, the objectives are to provide data on which to base dose assessments and decisions on the need for countermeasures. This appendix contains a brief description of the protocols that this laboratory would use for these purposes, and which are being recommended for use throughout the United Kingdom. In an emergency, many different organisations would carry out sampling and measurements, and it is essential that results are directly comparable. Analytical expertise can be conveniently assessed from intercomparison exercises, but the quality of sample collection cannot be checked easily. It is recommended therefore that sampling protocols are agreed in advance by all organisations who, in an emergency, could carry out environmental measurements. In such circumstances, an analytical laboratory would be under great pressure and could justifiably discard samples of dubious origin or quality.

1 Airborne radionuclides

Objectives: to assess doses due to inhalation of airborne radionuclides, to predict subsequent deposition on to ground; to assess doses due to the resuspension of deposited activity.

The radionuclides of interest in this study would be associated exclusively with particles and can therefore be sampled by drawing a known, large volume of air through a filter. The filter material can be of glass fibre, polystyrene or polycarbonate with a retention capability of at least 99% for 0.45 µm particles. The choice of filter material is sometimes limited to what is available at the time, although it should be borne in mind that organic filters are easier to decompose during subsequent analysis. The equipment should be sited so that the sampling head is 1-2 m from the ground in a flat open area at least 20 m away from buildings. The exhaust must be arranged so that air is not recycled. It is recommended that flow rates should not be less than $0.1 \text{ m}^3 \text{ min}^{-1}$. The sampling period is likely to vary as an emergency situation develops, but for the purposes of this project a minimum sampling period of 15 minutes has been assumed.

2 Rainwater

Objective: to estimate deposited activity.

Samples should be collected using a plastic funnel of known diameter leading to a plastic reservoir. The funnel should be positioned in an open area away from overhanging trees, buildings, walls, power lines etc. The top of the funnel should be raised above ground level so that melting snow is not collected. It is important that collected radionuclides do not adsorb on to the container, so, for short sampling periods of up to 5 days, a small quantity of nitric acid should be added before collection begins; 5 ml of concentrated acid for every litre of reservoir volume is adequate. For the purposes of this study, samples will probably not be left standing over 5 days, but where this is unavoidable, or as an alternative to the acid, a cocktail of different cations should be used. A suitable cocktail is given in reference Appl. Where samples have to be stored between collection and measurement, the bottle should be tightly stoppered and kept in a cool place. The total activity in the sample should be estimated in order to calculate the activity deposited over the area of the collector funnel in the time of collection.

3 Drinking water

Objective: to assess the intakes of radionuclides from ingestion of drinking water.

At least 1 litre of tap water should be collected in a plastic container. Treatment of the sample with acid and storage, if necessary, should be carried out as in Section 2. If the sample is taken directly from an open lake used as a reservoir, any particulate material should be filtered off and the activity concentrations determined separately. The results for aqueous and particulate phases can then be combined to give the total activity concentrations per unit volume of sample. The filtration step is described in Section 4.

4 Surface waters

Objective: to predict the radiological impact of the use of surface waters for irrigation or agricultural purposes.

Surface waters should be collected directly into a plastic bottle. The sample should be filtered shortly after collection through a filter of pore size 0.45 μm to remove particulate material on which radionuclides may adsorb. Acid should not be added until after filtration so that previously adsorbed material is not re-dissolved. The particulate loading (dry weight per unit volume of sample) should be determined. The activities of the aqueous and particulate phases should be determined separately. Storage requirements for the aqueous phase are as described in Section 2. The solid phase should be stored in a sealed container at ambient temperature.

5 Grass

Objectives: to estimate deposited activity; to predict transfer to animal products such as milk and meat.

For deposition, grass should be cut to within 10 mm of the ground from a known area, usually 1 square metre, using garden shears. If this is not sufficient to provide a large enough sample, then a larger area may be used provided that the area is measured and recorded. The site chosen for sampling should be away from trees, roads, tracks (including obvious animal tracks), hedges and buildings. Roadside verges are not acceptable since these may also include secondary deposition from run-off from the road surface and splash from vehicles. Estimates of total deposition should include measurements of the associated soil (Section 6).

Samples of grass used to estimated transfer to animal products must be taken from the area currently grazed by the animals. The criteria concerning the site of sampling are as before, and the sample is again normally taken from an area of 1 square metre (in practice the same sample is often used for both deposition and transfer estimates). There may also be a requirement to take samples from fields reserved for producing silage or hay so that estimates of future intakes can be made.

If necessary grass samples can be in a deep freeze.

6 Soil

Objectives: to estimate deposition of activity, in conjunction with overlying grass (Section 5); to predict onward transfer to plants. For deposition, a soil sample is taken from the approximate centre of the area from which the grass has been cut. Soil collected to estimate transfer to plants should be taken from those areas currently under cultivation, and well away from trees, hedges, buildings and areas susceptible to flooding. The soil sample should be sampled to a depth of 150 mm and from a known area of not less than 40 mm diameter. It is recommended that a purpose built percussion corer be used, garden tools not being considered acceptable.

7 Foodstuffs

Objectives: to demonstrate compliance with statutory limits; to assess dietary intakes of activity.

Samples may be collected at the point of production or at a retail outlet. In either case, the samples should be ready for consumption, and, in order to estimate dietary intakes, edible parts should be measured separately.

7.1 Milk and other fluids

Milk samples collected directly from farms should come from the milk tank, not from individual animals. The volume collected should be at least 1 litre, and a small amount of a preservative such as sodium metabisulphite should be added immediately after collection. Storage, if necessary, should be in a refrigerator.

For other food fluids, again, at least 1 litre should be taken. Storage, if necessary, should follow the manufacturers instructions, or if there are none, in a cool place.

7.2 Fruit and vegetables

Immature fruit and vegetables should not be measured. Culinary preparation can remove substantial proportions of radionuclides from some fruit and vegetables(App2), so it is important that, for estimates of dietary intake, edible parts and non-palatable parts are measured separately. The results can be combined later if required for regulatory purposes. At least 1 kg fresh weight of edible portion should be collected. Storage, if necessary, should be in a refrigerator or deep freeze.

7.3 Meat and fish

Again, at least 1 kg fresh weight of edible portion should be obtained and the edible and non-edible portions should be measured separately. Storage, if necessary, should be in a refrigerator or deep freeze.

7.4 Eggs

At least 6 eggs should be collected. Since the objective is to estimate the intake of activity, the shells should be removed and measurements should be made on the contents. Storage, if necessary, should be in a refrigerator, or, after homogenisation, by freeze-drying.

7.5 Other food solids

In general, at least 1 kg of these samples, such as tea, coffee and dried herbs, should be collected for measurement. The samples can be stored in a cool, dry place.

8 References

App1 Methods for the examination of waters and associated materials. Determination of radioactivity in water by multinuclide gamma ray spectrometry 1989. ISBN 0 11 752220 1. HMSO, London (1989).

App2 Bradley, E J, Popplewell, D S, and Wilkins, B T The influence of simple culinary preparation on the radionuclide content of vegetables. Proc. of Seminar on Radioactivity transfer during food processing and culinary preparation, Cadarache, France (1989). CEC, DG11.

VI. Investigation and improvement of methods for the determination of specific activities at laboratory level

Activity measurements of beta emitting radionuclides
In-situ measurements

by

U. Lauterbach

Physikalisch Technische Bundesanstalt
Braunschweig, Federal Republic of Germany

1. Introduction

In principle methods for the measurement of radioactivity in environmental samples are considered to be well developed and established. After the Chernobyl accident, however, it became evident that not everybody was prepared for quick in-situ measurements and that many measurement results especially with respect to beta emitting radionuclides were questionable. To assess the consequences of the fallout, quantitative data were needed in a reasonably short time on the surface-related activity of the contamination deposited on the soil outdoors, the activity concentrations in air and water and the specific activities of foodstuffs. Countermeasures can be only planned on the basis of reliable data on these quantities.

The situation was rather complicated during the Chernobyl accident because the fallout consisted of a mixture of various radionuclides - up to 30 - emitting mainly gamma radiation and beta particles. (Alpha emitters -actinides- will not be considered in this context.) The composition of the contamination was continiously changing due to the fast decay of radionuclides with short half-lives.
Portable contamination meters have often been used to ascertain the order of magnitude of the outdoors contamination. These instruments, originally developed for contamination measurements in laboratories, were available in large numbers. The readings of such instruments were often interpreted as the true values of the quantities to be determined without taking into account the entirely different measuring conditions in these situations. Countermeasures on this basis were as doubtful as the measured quantities themselves if the readings of the contamination meters were not critically screened and evaluated.
A discussion of the possibilities and limits of in-situ measurements of beta emitting radionuclides will clearly

demonstrate the need for the development of rapid and reliable methods at laboratory level. Portable contamination meters can be helpful in distinguishing between more and less contaminated areas and in giving the first indication of where samples for measurements at a laboratory level should be collected. It was the aim of this study to investigate if commercially available contamination meters are suitable for these tasks. By means of intercomparison measurements the properties of instruments have been additionally checked.

2. In-situ measurements

2a. In-situ gamma spectrometer

In accidents or other situations with radionuclides being released into the environment reliable data on the contamination should be obtained within a sufficiently short time in order to enable the taking of appropriate countermeasures to reduce the radiation doses to man. Radionuclides emitting gamma radiation can be rapidly and easily determined with a well calibrated in-situ gamma spectrometry system. Reliable data enabling the consequences of the event to be estimated are immediately available. Besides the kind of radionuclide, the measured spectra also furnish the values of the surface-related activities of the contamination deposited on the soil, or with an appropriate calibration, values of the specific activity of the soil. The disadvantages of this method are its restriction to gamma emitting radionuclides and that it can be only used by a highly qualified staff.

2b. Portable contamination meters

In contrast to the sophisticated spectromtry system anyone can turn on a contamination meter and take a reading in units given on the control panel mostly in s^{-1} or in Bq cm^{-2}. The detectors of these instruments are GM-counters, proportional counters or sandwich-scintillators which are sensitive chiefly to beta particles, but less effective in detecting gamma rays.

The indication shown by the meter is usually a count rate which is proportional to the flux of charged particles traversing the sensitive volume of the detector and producing electrical signals at its output. The detector reading is therefore in first order a measure of the particle flux at the point where the detector is located. The relationship between the reading and the activity of the contamination however is rather complex (see e.g. in (1),(3)). While it is very easy to take a measurement with this kind of instrument, it may become very difficult to correctly interpret the results obtained.
The main aspects to be considered in this context are

- the relationship between the number of particles emitted from the contamination and the activity
- the transfer of these particles to the meter's detector
- the different response received from several types of detectors depending on the kind and the energy of particles.

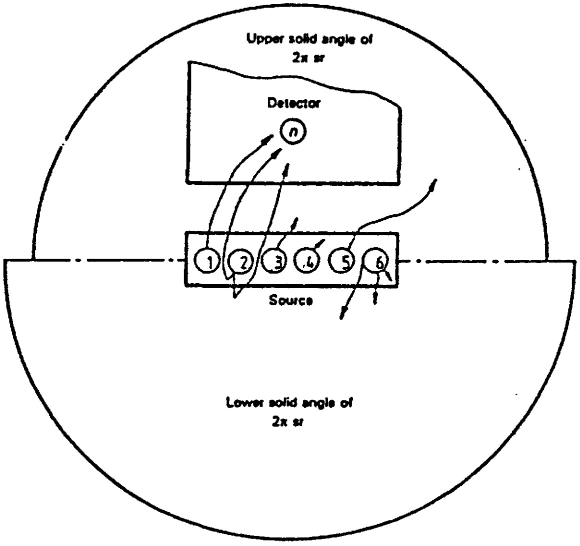

Fig.1 Schematic source - detector arrangement with possible paths of particles emitted from a radioactive source

Fig.1 taken from (3) illustrates this by showing the possible paths direct or indirect, by which particles from a source may or may not reach the detector:

(1) particles reaching the detector directly;

(2) particles reaching the detector as result of backscattering from the source or the holder;
(3) particles leaving the source in the direction of the upper solid angle 2π sr, but not reaching the detector due to absorption in air;
(4) particles emitted into the upper solid angle of 2π sr, but not leaving the source due to self-absorption;
(5) particles leaving the source in the direction of the upper angle 2π sr, but missing the detector due to the geometry;
(6) all particles emitted into the lower solid angle of 2π sr, including back-scattered particles with the exception of particles mentioned in (2).

The number of particles reaching the sensitive volume of the detector depends on the properties of the source and its carrier (due to self-absorption and backscatter), the geometrical arrangement of the detector (due to loss of particles and absorption in air) and the properties of the detector (due to absorption and backscatter in the entrance windows). Moreover, owing to its energy-dependent efficiency, the number of particles actually counted is less than the number of particles entering the detector. The amount of backscatter of beta particles depends mainly on the atomic number of the scattering material and to a lesser extent on the energy of the particles (6),(7),(8). Data on the absorption of beta particles in different materials are given in (1),(8). The range of beta particles in solid matter is in the order of only a few millimeter. This must be taken into account when determining the specific activity of environmental samples. Owing to the short range of beta particles, special preparations and a special measuring technique are necessary.

The complex relationship between the activity of a radionuclide emitting beta particles and the number of particles counted clearly illustrates the difficulties in determining the activity of a surface contamination directly from the

count rate. As has been pointed out, many parameters must be taken into account in this case.
The use of a suitably calibrated instrument is therefore more usual and convenient. The calibration source should have properties similar to those of the contamination to be measured - radionuclide, carrier with respect to backscatter and selfabsorption in the source -. Conditions in a laboratory usually fulfil these requirements near enough for sufficiently accurate contamination measurements to be carried out there.

Nevertheless the results of such measurements should be evaluated only by qualified personnel considering the complex relationship between activity and the indication of a contamination meter and the further requirements necessary to obtain reliable results.
The purpose of a survey carried out by the NPL (10) in 1986 was to check the accuracy of surface contamination measurements in UK hospitals. The analysis of the results, however, clearly demonstrated that there were significant errors and the situation in this field needs some improvement.

In addition to their use in laboratories contamination meters were often used during the Chernobyl accident to obtain data on the outdoors contamination. Many instruments were operated by unqualified personnel and the evaluation of the results was restricted to the report on the readings in units given on the control panel. Some confusion arose among the public as a result of the uncritical publication of data such as surface-related activities and without considering the physical relationships, such as the specific activities of environmental samples (1).

In incident or accident situations there is often little knowledge of the mixture of the outdoor contamination. The measuring conditions are not well defined and the composition of the mixture changes continuously to the radionuclides with short half-lives. In addition, the fallout was not only deposited on the surface of the soil but was also migrating in it to a depth of 3 cm. Fig.1 clearly demonstrates that in a situation like this there is a poor relationship between the activity of the fallout and the reading of a contamination meter for pure beta emitting radionuclides. Absorption in the soil, scatter, varying distances between source and detector, absorption in air and different responses of particles with different energies are the main parameters influencing these results.

This problem can only be solved by combining these measurements with more reliable methods at laboratory level, where data of sufficient accuracy can be obtained. There is no doubt that contamination meters are valuable tools in ascertaining the degree of contamination and in deciding if environmental samples should be collected and more precise measurements at laboratory level be carried out.

In addition to assessing soil contamination these instruments have also been used to decide if vegetables in the field e.g. lettuce should be banned due to the "specific activity" measured. The previous discussion have clearly shown that this method was very doubtful and completely unsuitable. When the "specific activity" was determined using this doubtful method in many cases destroying vegetables by ploughing the fields seemed to be unnecessary and expensive as farmers had to be compensated. As has been pointed, out only activity measurements at laboratory level provide reliable results on which decisions on countermeasures, e.g. ban of foodstuffs, should be based.

3. Properties of portable contamination meters

3a. Comparison measurements

In collaboration with 18 institutes (local authorities, nuclear power plants, fire-brigades, universities, hospitals) and a number of physicians from the Lower Saxony area, comparison measurements on portable surface contamination meters have been carried out (9). These instruments were to be checked for their suitability for use in tasks as discussed in section 2. The participants were asked to determine with their equipment the surface-related activities of four surface sources with the radionuclides Pm-147, Co-60, Cl-36 and Sr-90/Y-90 calibrated at the Physikalisch-Technische Bundesanstalt. The calibration was performed using a windowless large-area proportional counter (5).

The four surface sources had an area of 150 cm^2 and each complied with the recommendations of the ISO draft on "Reference sources for the calibration of surface contamination monitors - Beta-emitters (maximum beta energy greater than 0.15 MeV) and alpha-emitters"(4),(5). The data on these sources are presented in
Table 1.

Table 1: Data on the reference sources

Radionuclide	Max. energy of beta particles	Surface-related activity *)	Uncertainty of the reported activity (confidence-level 99%)	Particle flux density
	keV	Bq cm^{-2}		s^{-1} cm^{-2}
Pm-147	225	10.51	10%	5.30
Co-60	310	12.09	3%	5.74
Cl-36	710	16.55	7%	9.26
Sr-90/	545	7.74	5%	9.74
Y-90	2270			

*) related to 10.04.1987

To ensure uniform geometry conditions and a constant distance between the source and the entrance windows of the detectors the special device of acrylglas was constructed shown in Fig. 2. Frames of different sizes were used to fit all areas of the entrance windows. The distance between source and window in this arrangement was in each case in the order of 1 mm .

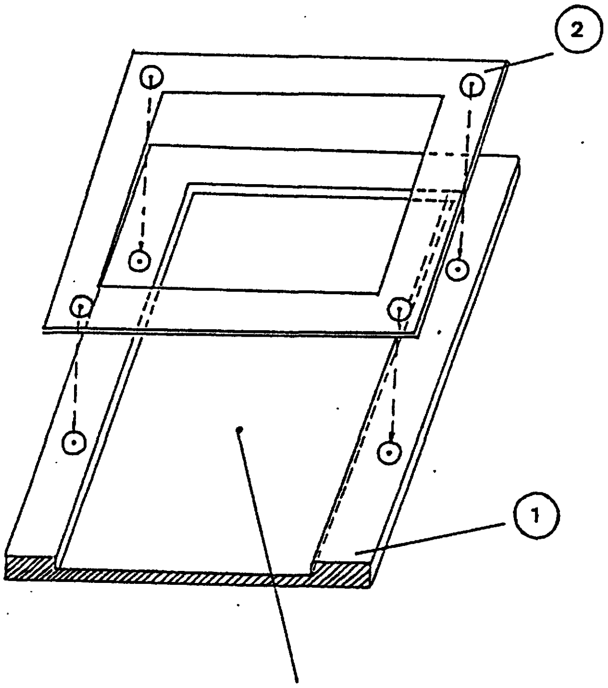

reference source: 150 mm X 100 mm

Fig.2 Schematic diagram of the distance device
((1) support for the surface source,
(2) exchangeable frame)

A staff member of the Physikalisch-Technische Bundesanstalt visited all participating institutes with this set of four sources and the distance-device, protocolled the technical data of the equipment and asked the participants to determine the surface-related activities of the four sources. Because there were several uncalibrated instruments, the number of activities reported for the source set is below that of the equipment tested. In each case the count rate was protocolled.

3b. Results of the comparison

A total of 68 instruments were tested in the comparison measurements. The instruments contained proportional counters, GM counters or sandwich scintillation detectors. In a few cases no information was given on the detector type. Table 2 shows the number and the classification of the instruments according to the detector types. Additional information is given on the number of instruments tested with a specific radionuclide. The instruments were mostly calibrated with Sr-90/Y-90 reference sources.

Table 2: Number and classification of the instruments

Detector type	Number of instruments	Number of instruments with data for a specific radionuclide			
		Pm-147	CO-60	Cl-36	Sr-90/Y-90
Large-area proportional counter					
Filling gas:					
Butane	8	3	3	2	6
Butane/Propane	21	5	5	4	16
Xenon	21	14	13	8	12
Methane	8	2	2	2	2
GM counters	4	1	1	1	1
Scintillation-detectors	3	2	2	2	3
Not known	3	1	1	1	1
Total number	68	28	27	20	41

Fig.1 demonstrates that theoretically the fraction of the particles emitted from the source and reaching the detector is 50%, if backscatter on the carrier of the source is neglected. A careful evaluation of the count rates of all detector types and a comparison of the evaluated surface-related activities with the values given in Table 1 shows that only a fraction of about 20% for low energy particles from Pm-147, about 26% from Co-60, about 38% from Cl-36, and about 40% from Sr-90/Y-90 is in the mean detected by an instrument.

The absorption of particles in the entrance window was shown to be most important.

Table 3 in the annex contains mean activity data from measurements with the different detector types and radionuclides. The maximum and minimum values measured are also included in this table to demonstrate the spread of the results. The reference values of Table 1 are given in the last row for comparison. In Table 4 a summary illustrates the main results of the comparison measurements (see also Fig.3 and Fig.4). Some results reported by the participants were omitted when all data was screened. Malefunctioning of the equipment or misinterpretation of the readings must be the reason for reported activities beyond all reasonable values.

Table 4: Mean measured surface-related activity $\bar{A}$ for the various radionuclides together with minimum and maximum values A_{min} and A_{max} measured

Radionuclide	Reference value[+)] Bq cm^{-2}	Number of measurements	$\bar{A}$ Bq cm^{-2}	A_{min} Bq cm^{-2}	A_{max} Bq cm^{-2}
Pm-147	10.51 ± 1.05	27	9.21	2.50	14.74
Co-60	12.09 ± 0.36	25	11.68	5.90	22.99
Cl-36	16.55 ± 1.16	18	15.65	7.99	23.55
Sr-90/ Y-90	7.74 ± 0.39	39	10.46	4.30	20.80

+) The confidence level for the uncertainties of the reference values is 99%

Fig. 3 shows that the spread of the measured values is independent of the particle energy and they always vary by a factor of about 4 to 5.

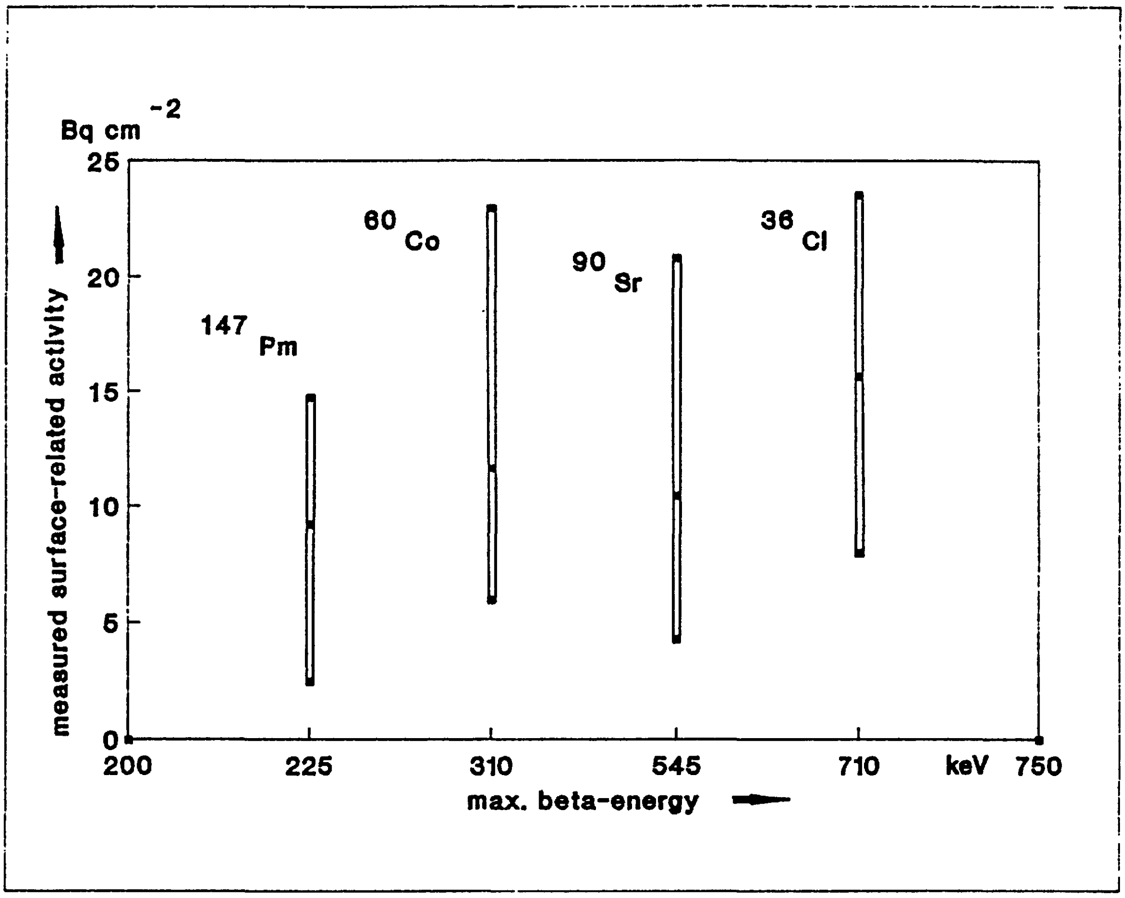

Fig.3 Measured surface-related activities for surface sources with Pm-147, Co-60, Sr-90/Y-90, and Cl-36 versus the maximum beta energy of the radionuclides. The extension of the bars comprises all measured values.The black square in the middle of each bar indicates the mean value.

In Fig.4 the measured activity values are plotted versus the reference values of the four reference sources. The dashed line indicates the position of equal measured and reference values. The horizontal width indicates the uncertainty of the reference values. In the case of Sr-90/Y-90 and Co-60 the mean values are shifted to the minimum values. For Sr-90/Y-90 the explanation may be that some of the participants reported the total activity of the Sr-90/Y-90 source instead of the activity of Sr-90 only which they were asked for. The radiation field of the Co-60 source was a mixture of beta particles and photons which may have some influence on the results.

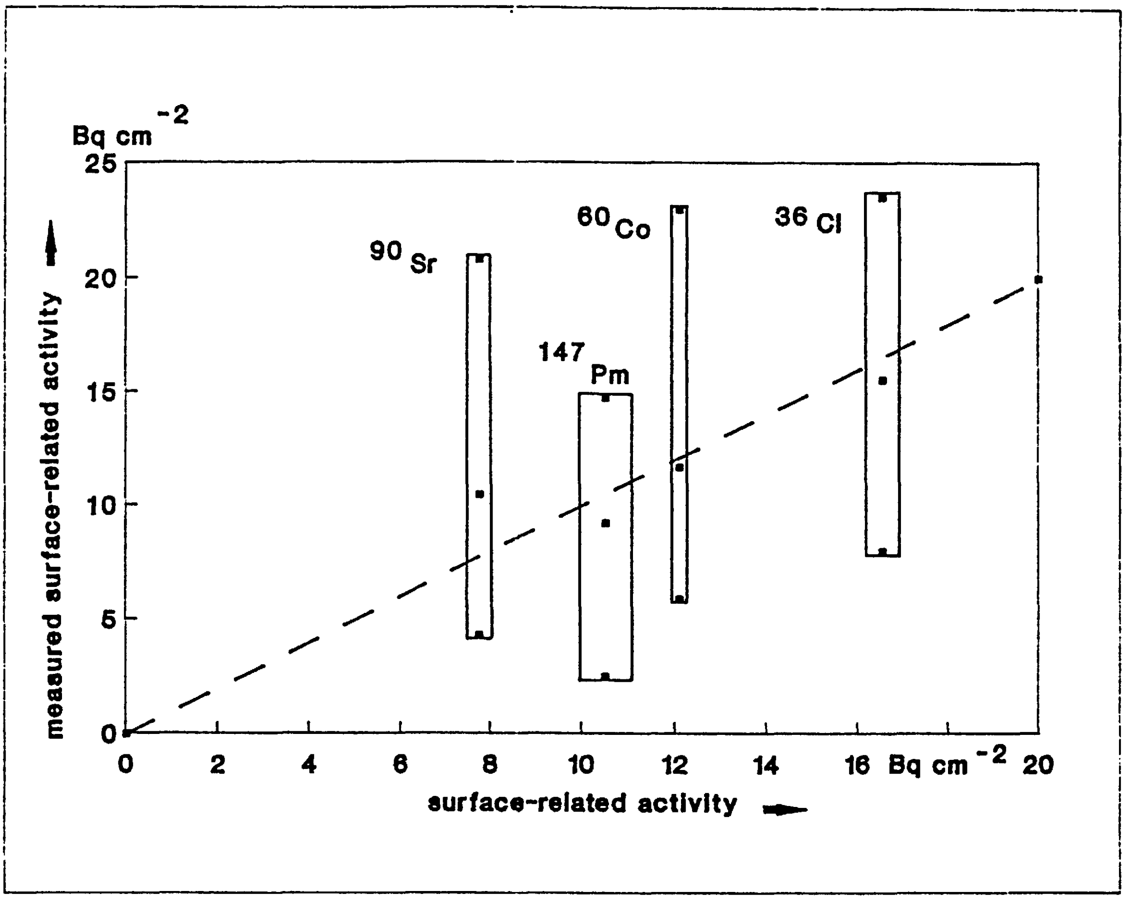

Fig.4 Measured surface-related activities for surface sources with Pm-147, Co-60, Sr-90/Y-90, and Cl-36 versus the reference values of the surface sources. The extension of the bars comprises all measured values. The black square in the middle of the bar represents the mean value. The horizontal width of the bars corresponds to the uncertainty of the reference values.

Mean values of detector responses are calculated from the results obtained for all detectors and given in Table 5. Minimum and maximum values are also shown. These data illustrate that the responses of all kinds of portable instruments cover one order of magnitude. But the same is true if only the data from one detector type are screened. This result is disappointing especially if one considers the well defined measuring conditions prevailing in the comparison measurements. These values also clearly demonstrate that within the range of particle energies considered the response differs by a factor of about 2.

Table 5: Detector responses calculated from the data of all detectors

Radionuclide	Max.energy of beta particles keV	Detector response Mean value $s^{-1}Bq^{-1}$	Min. value $s^{-1}Bq^{-1}$	Max. value $s^{-1}Bq^{-1}$
Pm-147	225	0.11	0.006	0.20
Co-60	310	0.15	0.02	0.26
Cl-36	710	0.22	0.03	0.34

4. Discussion and conclusions

The comparison measurements discussed in section 3 were carried out in order to obtain more information on the properties of portable contamination meters used in in-situ measurements of the activity of beta-emitting radionuclides. The measuring conditions were fixed in order to reduce the influence of the geometrical arrangement, the varying absorption in air, the scatter of beta particles in the environment etc. Reported data with significant errors due to malefunctioning equipment or to misinterpretation of the readings have been omitted in this assessment.

The reported results for the activities of the reference sources differ not only for different detector types but for detectors of the same type, too. The responses of the detectors types investigated vary by a factor of about 2 in the energy range considered.Due to this energy dependence the contribution of the different radionuclides of a mixed contamination to the count rate of the the detector may differ significantly from their contribution to the real particle flux from the contamination.

In the calibration of an instrument the count rate is measured in the field of a well-specified reference surface source with a given activity and a well-defined geometrical arrangement. The indicated count rate is proportional to the particle flux at the location of the detector. The unknown activity of a contamination is determined by comparing the particle flux with that of the calibration source. To get reliable results, the following conditions should be satisfied:

- the geometrical arrangement should correspond to that used in the calibration procedure
- the relationship between the particle flux and the activity of the unknown source should be similar to that of the reference source.

Only laboratory conditions will fully comply with these requirements for carrying out contamination measurements. The conditions prevailing in in-situ measurements outdoors are often completely obscure, especially when unknown mixtures of radionuclides emitting different kinds of particles - beta particles and photons - with different energies are taken into account.In such cases reliable results cannot be expected.

As mentioned in section 3b even instruments of the same type show a wide variation in the indicated values. These discrepancies may be caused by differences in the technical properties of the individual instruments.
In consideration of the physical conditions and the technical features of the instruments investigated the conclusion reached

here is that contamination meters are mostly not suitable for the determination of the activity of outdoor contamination in accident or incident situations. They are, however, valuable tools in ascertaining the degree of contamination and in making decisions where samples for measurements in a laboratory should be collected.

Acknowledgements

The help and technical assistance of the institutions in the Lower Saxony area involved in this programme are especially acknowledged. Special thanks are also due to Mr.Heyer for visiting the participants and to Mrs. S.Wöhler for the evaluation of the data and the preparation of the diagrams. This study was supported by the Commission of the European Communities.

References

|1| K. Debertin, W. Kolb, U. Lauterbach, W. Peßara: Umweltradioaktivität - Probleme bei Aktivitätsbestimmungen -. PTB-Bericht PTB-Ra-19 (1987)

|2| DIN 44 801 (Oberflächen-Kontaminationsmeßgeräte und -monitoren für Alpha-, Beta- und Gammastrahlung), Teil 1 (Allgemeine Festlegungen), Ausgabe Oktober 1984

|3| ISO-draft ISO/DIS 7503/1: Evaluation of surface contamination - Part 1: Beta-emitters (maximum beta energy greater than 0.15 MeV) and alpha emitters, 1986

|4| ISO-draft ISO/DIS 8769: Reference sources for the calibration of surface contamination monitors - Beta-emitters (maximum beta energy greater than 0.15 MeV) and alpha- emitters, 1986

|5| K.F. Walz: Standardpräparate zur Kalibrierung von Kontaminationsmonitoren; PTB-Jahresbericht 2.6.11, 1987

|6| L. Danguy: Contribution a l'etude de la retrodiffusion ß; Monographie Nr. 10, Institut Interuniversitaire des Sciences Nucleaires, Bruxelles-11, rue d'Egmont

|7| F. Suzor et G. Charpak: Etude en Fonction de l'Energie de la Diffusion en Arriere des Electrons; Le Journal de Physique et le Radium, T. 13, 1952

|8| R. Engelmann: Streuung und Absorption von ß-Strahlen in ebener Geometrie. Teil I: Messung von Transmission und Rückstreuung; Nukleonik, Bd. 3, S. 139, 1961

|9| U. Lauterbach: Aktivitätsbestimmung mit tragbaren Kontaminationsmeßgeräten - Vergleichsmessungen mit kalibrierten Flächenpräparaten - PTB-Bericht PTB Ra-20 (1988)

|10| M.J. Woods: Accuracy of surface contamination measurements. Survey of UK hospitals, 1986, NPL Report, RS(EXT)91, April 1987

Table 3: Values of the reported surface - related activities $\bar{A}$ in Bq cm^{-2} for each group of detector types

Detector type	Pm-147			Co-60			Cl-36			Sr-90/Y-90		
	$\bar{A}$	Max.	Min.	$\bar{A}$	Max.	Min.	$\bar{A}$	Max.	Min.	$\bar{A}$	Max.	Min.
Large-area proportional counters												
Filling gas:												
Butane	10.78	14.80	4.54	15.16	23.00	7.09	19.35	22.7	16.00	9.76	13.2	6.0
Butane/Propane	9.31	12.20	7.04	12.16	17.20	8.70	14.89	19.44	11.00	10.67	20.8	4.4
Xenon	11.10	38.00	2.50	13.93	33.60	5.90	36.87	110.72	14.5	17.50	90.0	6.27
Methane	6.70	8.70	4.70	7.40	7.50	7.30	11.00	14.00	8.00	10.43	13.9	7.00
GM counters	11.00	-	-	20.00	-	-	23.60	-	-	14.30	-	-
Scintillators	9.81	10.91	8.71	10.65	11.10	10.20	13.70	14.4	13.00	9.43	13.6	4.30
Not known	8.45	-	-	9,47	-	-	15.16	-	-	6.27	-	-
Mean of $\bar{A}$:	9.59			12.68			19.22			11.21		
Max. and min. value:		38.00	2.50		33.6	5.90		110.72	8.00		90.0	4.3
Reference value:	10.51			12.09			16.55			7.74		

$\bar{A}$ = mean value

VII. INTERPRETATION OF READINGS FROM ALARM MONITORS.

Ole Walmod-Larsen, Henrik Ahlers, Joergen Lippert,Flemming Nielsen
Risoe National Laboratory, University Center of Ålborg

1. Objectives of the project:

Development of instruments and methods as alarm monitors providing improved sensitivity at environmental dose-rate levels and the ability of discriminating against short-term variation of natural radiation exposure related to the natural content of radon in the air.

A system of 11 nationwide early warning stations should be capable of <u>detecting and warning</u> on such low levels of increase in the ambient background radiation as the 10% measured at Risoe on the "First Chernobyl peak" originating from man-made radioactivity.
The system should enable the competent authority to give precise and relevant information to the public within few hours after manmade radioactivity had entered Danish territory.

2. Comments on the progress of the project:

At the time of the project proposal negotiations, it was expected that our group would be entrusted to construct and operate the above mentioned 11 nationwide early warning stations, so that experience from these stations could be utilized in the project work within the time frame of the project.

The competent authority was at that time the Danish Environmental Protection Agency (EPA). 1st Jan 1988, the authority was transferred to the Civil Defence and Emergency Planning Agency (CDEPA) under the Ministry for Interior. This move gave rise to a delay in the planning and ordering of the system in question.

The ordering was delayed until summer 1989. It was then demanded, that the stations should be ready for test operation 1st Jan 1990.

3. Instruments applied in the project work:

A test station was constructed at our site with the aim of measuring the ambient gamma background radiation.

Two radiation detectors are applied:

1) A Reuter-Stokes pressurized ionization chamber with a dynamic range of 0.01 microSv/h - 100 mSv/h with on-line data recording.

2) A 3"x3" NaI crystal equipped with a 256 channel analyzer with an energy range of 100 keV - 3 MeV. The spectrum is read out each hour.

3) Detailed meteorological data incl. precipitation are obtained from the Risø meteorological station, available from Jan. 86.

Regarding (1):	The ionization chamber was in operation already in March 1986, i.e. through the initial Chernobyl accident period. Since then data have been obtained with minor interruptions.
Regarding (2):	Data have been obtained from Dec. 86 with minor interruptions.
Regarding (3):	From rain intensity gauges at the 11 stations, continuous data were available after Dec. 1989, giving signals with a sensitivity of 0.1 mm/h.

On-line data transfer was established from the test station to a computer in the laboratory. From Dec. 1989 a central computer was serving the 11 stations in the nationwide early warning monitoring system mentioned above.

4. **Main Tasks:**

After an initial evaluation, the investigation within the project was concentrated on the following main tasks:

A. To search for a set of alarm criteria based on the coupling of data from the ion chamber reading (1) and precipitation data (3).

B. To utilize the information from the spectrometer (2) and from the meteorological data (3) to exclude the increases in readings due to higher Radon daughter concentrations during and after precipitation.

C. To apply data technique in the handling of the information obtained by (1), (2) and (3) for the separation of Radon daughter radiation and radiation from man-made radioactivity.

4.1 Description of the work on task A:

From March 1986 to September 1988 a total of 15,581 one-hour, time correlated measurements of both ambient radiation dose rate from (1) and precipitation rate (3) have been recorded and analyzed.

Fig. 1 illustrates both the ion chamber dose rate readings (upper curve) and the precipitation rate (lower curve) as a function of time in April and May 1986. The increase, marked I, is caused by Radon-daughters washed out by precipitation. The increase, marked II, is the passage of the first cloud from Chernobyl on 27th April. The increase, marked III, is due to Chernobyl activity deposited by precipitation on 7th May.

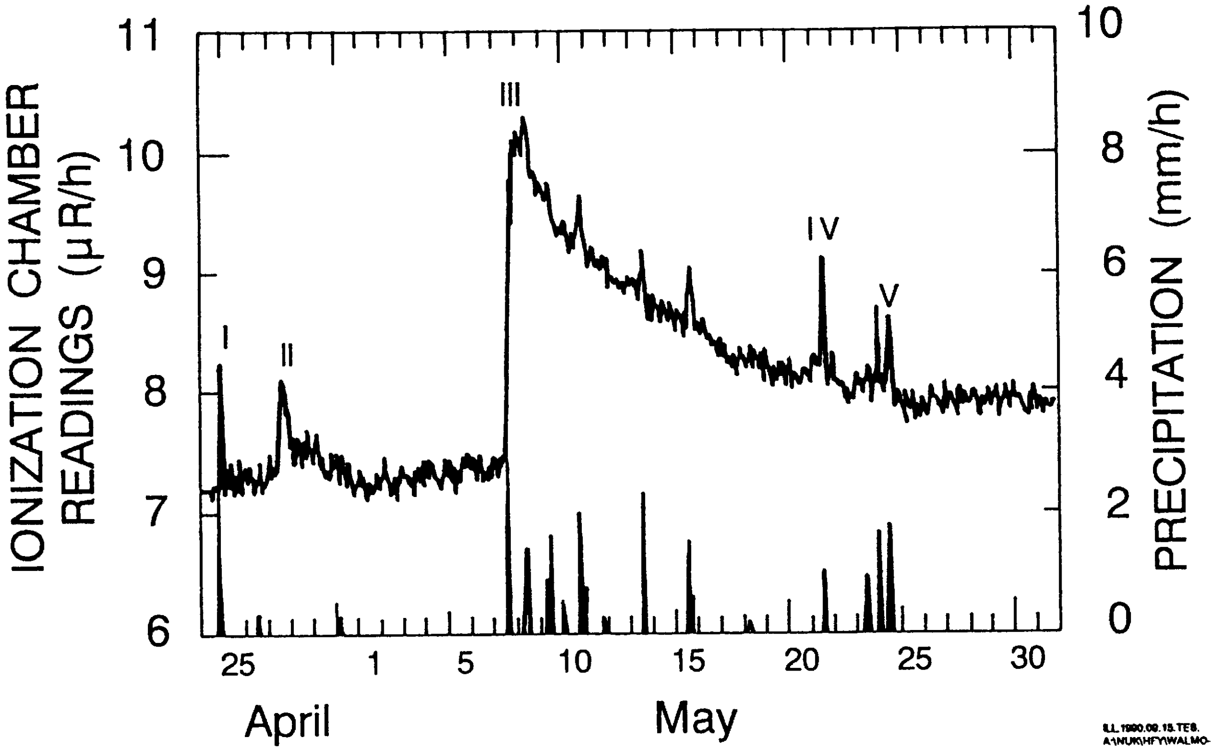

Fig. 1. Ion chamber dose rate and precipitation rate measured at the test station at Risoe National Laboratory in April and May 1986.

The increases marked I - V are described in the text.

Analyses of the 15,581 data set indicated, that a way to detect events like Chernobyl was to concentrate upon <u>the increase rate</u> in the ionization chamber reading.

When the first Chernobyl cloud, marked II in fig. 1, reached Risø, the reading at 1407 hours showed an increase of 5.55 % or 0.41 microR/h compared with the reading one hour before.

A search for data with increases > 5 %/hour gave 61 such data sets, 15,519 with <5 %/hour, and one initial data set.

An analysis of the 61 data set separated them into two groups:
55 with an increase to a level above the "normal level"
6 with an increase to the normal level from an unusually low level in the preceding hours.
The "normal level" is here understood as the mean value of the preceding 8 hours.

The need to exclude the 6 last mentioned data set led to the formulation of an algorithm for sorting out the relevant events for alarm :

"Attention is necessary if a reading increases more than 5 % both compared with the last hour and with the mean value of the last 8 hours".

Of the 55 increases, 51 were found to be coupled with precipitation in the same or in the preceding three hours.

The remaining 4 increases during dry weather were given closer consideration.

With the standard deviation (SD) available the data sets could be further sorted. The sampling time of these data was set to 40 sec. The mean values of 90 samplings (one hour) and the SD were collected.

The SD of the 15,581 data set could be divided into two groups:
15,578 with SD < 10 % and 3 - - > 10 %.

These 3 increases were found to be 3 of the 4 dry weather increases mentioned above.

Further checks showed that in the 3 situations both the reading and the SD were normal one hour before and one hour after, wherefore they were discarded as non-valid readings, probably caused by disconnections/faults in the system.

The only dry weather increase left to be considered proved to be the arrival of the first Chernobyl cloud on 27th April 1986 at 1407 hours, marked II in fig. 1.

Analysis of the 51 ion chamber readings with precipitation led to the formulation of the "Precipitation" part of the
algorithm :

"Attention is necessary if a reading has increased more than 20 % both compared with the last hour and compared with the mean value of the last 8 hours".

Applying this part of the algorithm to the data sets separated one data set with an increase of > 20 %/hour.
This data set appeared to be the second Chernobyl increase (in fig. 1 marked III), which arose during precipitation on Wednesday 7th May 1986.
The algorithm is shown in **fig. 2.**

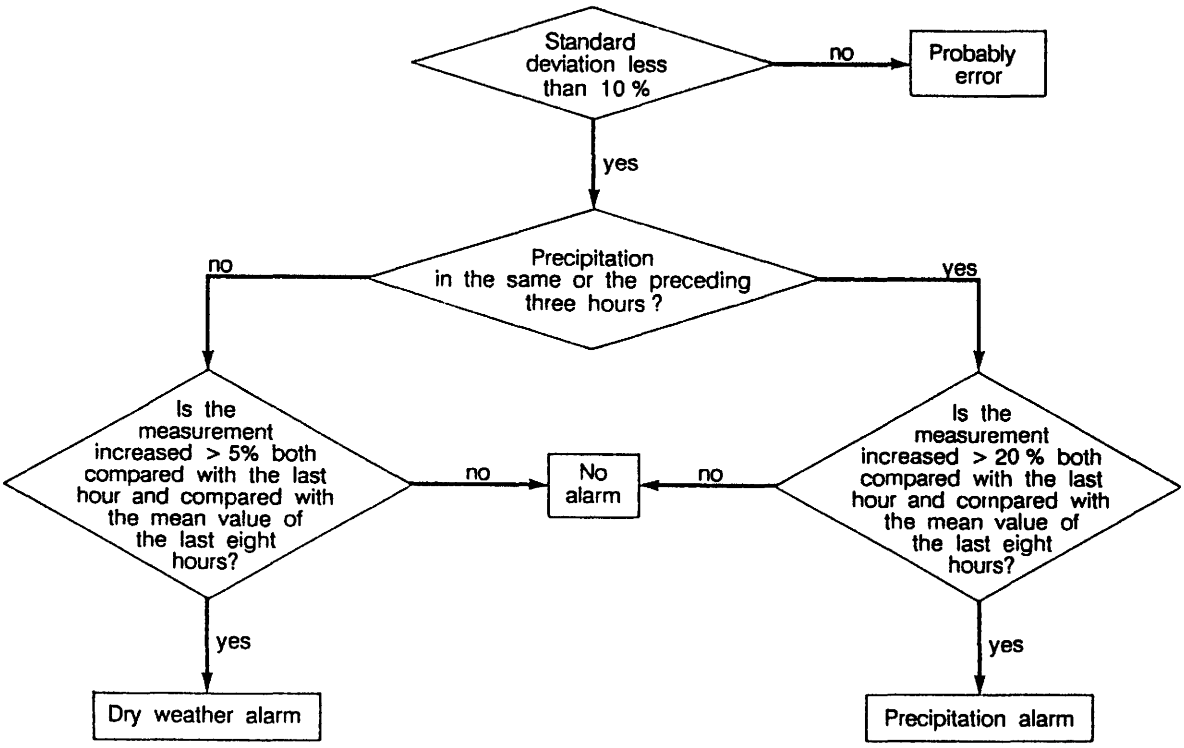

LL 1990.08.15.TES.
A:\NUR\HFY\WALMO-1B GEM

Fig. 2. Algorithm developed to detect increases in ambient ion chamber dose rate due to manmade radionuclides.

From this part of the work it can be concluded, that application of the algorithm to the data sets from instruments (1) and (3) can detect an increase in the ambient dose rate level caused by man-made radionuclides of a minimum of ca. 5 % in dry weather and ca. 20 % in connection with precipitation.

Examples of increases caused by Rn-daughters in connection with precipitation, which are excluded from alarm by the algorithm, are found in fig. 1, marked I, IV and V.

Data on the five increases shown in fig. 1 are summarized in the table, **fig. 3.**

Increase		Precipitation	
no	microR/h	%	mm/h
I	0.65	8.89	5.9
II	* 0.41	5.55	0
III	* 2.22	29.4	3.65
IV	0.60	7.08	2.9
V	0.51	6.29	1.9

*: Separated by the algorithm.

Fig. 3. Summary of data on the increases shown in fig. 1.

4.2 Description of the work on tasks B and C :

Since Dec.1986 256-channel-spectra from the 3" NaI (Tl) detector have been recorded with only minor interruptions.

After one hour's counting time the data are automatically transferred to the memory of a computer, and the spectrometer is reset and restarted.

The computer handling of the spectrometer data (including system information such as high voltage, temperature etc.) are a.o. comprised of an automatic energy calibration of the 256 channel spectra from the 3" NaI (Tl) detector (The position of the ever present K-40 is here utilized as a reference).

The contribution from the different radionuclides to the dose rate are then analyzed in detail by the following procedure:
The spectra obtained are analyzed by fitting of spectra ("Least squares method") from the naturally occurring isotopes K-40 and Rn-daughters and from I-131.

The remaining counts (beyond a preset level based on counting statistics) is then expected to be caused by other man-made radionuclides.

Tests with an I-131 source proved, that the system combination B and C easily can detect an increase of ca. 5 % in the total dose rate as a man-made contribution compared to increases up to 50 % from Radon daughters, which is the maximum observed during 4 years.

From task B and C it is concluded that the sensitivity of the procedure developed for utilizing data from B and C is in the order of ca. 5 - 10 % increase in the normal level.

European Communities — Commission

EUR 12557 — Monitoring and surveillance in accident situations — Post-Chernobyl action

Edited by: K. Chadwick, H. Menzel

Luxembourg: Office for Official Publications of the European Communities

1993 — XXIV, 163 pp., num. tab., fig. — 21.0 × 29.7 cm

Radiation protection series

ISBN 92-826-5330-7

Price (excluding VAT) in Luxembourg: ECU 20

The Chernobyl accident, which occurred on 26 April 1986, presented major challenges to the European Community with respect to the practical and regulatory aspects of radiation protection, public information, trade — particularly in food — and international politics. The Chernobyl accident was also a major challenge to the international scientific community which had to evaluate rapidly the radiological consequences of the accident and advise on the introduction of any countermeasures. Prior to the accident at Chernobyl, countermeasures to reduce the consequences of radioactive contamination had been conceived largely in the context of relatively small accidental releases and for application over relatively small areas. Less consideration had been given to the practical implications of applying such measures in the case of a large source and a spread over a very large area.

Venta y suscripciones • Salg og abonnement • Verkauf und Abonnement • Πωλήσεις και συνδρομές
Sales and subscriptions • Vente et abonnements • Vendita e abbonamenti
Verkoop en abonnementen • Venda e assinaturas

BELGIQUE / BELGIË

Moniteur belge /
Belgisch Staatsblad
Rue de Louvain 42 / Leuvenseweg 42
B-1000 Bruxelles / B-1000 Brussel
Tél. (02) 512 00 26
Fax (02) 511 01 84

Autres distributeurs /
Overige verkooppunten

Librairie européenne/
Europese boekhandel
Rue de la Loi 244/Wetstraat 244
B-1040 Bruxelles / B-1040 Brussel
Tél. (02) 231 04 35
Fax (02) 735 08 60

Jean De Lannoy
Avenue du Roi 202 /Koningslaan 202
B-1060 Bruxelles / B-1060 Brussel
Tél. (02) 538 51 69
Télex 63220 UNBOOK B
Fax (02) 538 08 41

Document delivery:

Credoc
Rue de la Montagne 34 / Bergstraat 34
Bte 11 / Bus 11
B-1000 Bruxelles / B-1000 Brussel
Tél. (02) 511 69 41
Fax (02) 513 31 95

DANMARK

J. H. Schultz Information A/S
Herstedvang 10-12
DK-2620 Albertslund
Tlf. (45) 43 63 23 00
Fax (Sales) (45) 43 63 19 69
Fax (Management) (45) 43 63 19 49

DEUTSCHLAND

Bundesanzeiger Verlag
Breite Straße
Postfach 10 80 06
D-W-5000 Köln 1
Tel. (02 21) 20 29-0
Telex ANZEIGER BONN 8 882 595
Fax 2 02 92 78

GREECE/ΕΛΛΑΔΑ

G.C. Eleftheroudakis SA
International Bookstore
Nikis Street 4
GR-10563 Athens
Tel. (01) 322 63 23
Telex 219410 ELEF
Fax 323 98 21

ESPAÑA

Boletín Oficial del Estado
Trafalgar, 29
E-28071 Madrid
Tel. (91) 538 22 95
Fax (91) 538 23 49

Mundi-Prensa Libros, SA
Castelló, 37
E-28001 Madrid
Tel. (91) 431 33 99 (Libros)
431 32 22 (Suscripciones)
435 36 37 (Dirección)
Télex 49370-MPLI-E
Fax (91) 575 39 98

Sucursal:

Librería Internacional AEDOS
Consejo de Ciento, 391
E-08009 Barcelona
Tel. (93) 488 34 92
Fax (93) 487 76 59

Llibreria de la Generalitat
de Catalunya
Rambla dels Estudis, 118 (Palau Moja)
E-08002 Barcelona
Tel. (93) 302 68 35
302 64 62
Fax (93) 302 12 99

FRANCE

Journal officiel
Service des publications
des Communautés européennes
26, rue Desaix
F-75727 Paris Cedex 15
Tél. (1) 40 58 75 00
Fax (1) 40 58 77 00

IRELAND

Government Supplies Agency
4-5 Harcourt Road
Dublin 2
Tel. (1) 61 31 11
Fax (1) 78 06 45

ITALIA

Licosa SpA
Via Duca di Calabria, 1/1
Casella postale 552
I-50125 Firenze
Tel. (055) 64 54 15
Fax 64 12 57
Telex 570466 LICOSA I

GRAND-DUCHÉ DE LUXEMBOURG

Messageries Paul Kraus
11, rue Christophe Plantin
L-2339 Luxembourg
Tél. 499 88 88
Télex 2515
Fax 499 88 84 44

NEDERLAND

SDU Overheidsinformatie
Externe Fondsen
Postbus 20014
2500 EA 's-Gravenhage
Tel. (070) 37 89 911
Fax (070) 34 75 778

PORTUGAL

Imprensa Nacional
Casa da Moeda, EP
Rua D. Francisco Manuel de Melo, 5
P-1092 Lisboa Codex
Tel. (01) 69 34 14

Distribuidora de Livros
Bertrand, Ld.ª

Grupo Bertrand, SA
Rua das Terras dos Vales, 4-A
Apartado 37
P-2700 Amadora Codex
Tel. (01) 49 59 050
Telex 15798 BERDIS
Fax 49 60 255

UNITED KINGDOM

HMSO Books (Agency section)
HMSO Publications Centre
51 Nine Elms Lane
London SW8 5DR
Tel. (071) 873 9090
Fax 873 8463
Telex 29 71 138

ÖSTERREICH

Manz'sche Verlags-
und Universitätsbuchhandlung
Kohlmarkt 16
A-1014 Wien
Tel. (0222) 531 61-0
Telex 112 500 BOX A
Fax (0222) 531 61-39

SUOMI

Akateeminen Kirjakauppa
Keskuskatu 1
PO Box 128
SF-00101 Helsinki
Tel. (0) 121 41
Fax (0) 121 44 41

NORGE

Narvesen information center
Bertrand Narvesens vei 2
PO Box 6125 Etterstad
N-0602 Oslo 6
Tel. (2) 57 33 00
Telex 79668 NIC N
Fax (2) 68 19 01

SVERIGE

BTJ
Tryck Traktorwägen 13
S-222 60 Lund
Tel. (046) 18 00 00
Fax (046) 18 01 25

SCHWEIZ / SUISSE / SVIZZERA

OSEC
Stampfenbachstraße 85
CH-8035 Zürich
Tel. (01) 365 54 49
Fax (01) 365 54 11

CESKOSLOVENSKO

NIS
Havelkova 22
13000 Praha 3
Tel. (02) 235 84 46
Fax 42-2-264775

MAGYARORSZÁG

Euro-Info-Service
Pf. 1271
H-1464 Budapest
Tel./Fax (1) 111 60 61/111 62 16

POLSKA

Business Foundation
ul. Krucza 38/42
00-512 Warszawa
Tel. (22) 21 99 93, 628-28-82
International Fax&Phone
(0-39) 12-00-77

ROUMANIE

Euromedia
65, Strada Dionisie Lupu
70184 Bucuresti
Tel./Fax 0 12 96 46

BULGARIE

D.J.B.
59, bd Vitocha
1000 Sofia
Tel./Fax 2 810158

RUSSIA

CCEC (Centre for Cooperation with the European Communities)
9, Prospekt 60-let Oktyabria
117312 Moscow
Tel. 095 135 52 87
Fax 095 420 21 44

CYPRUS

Cyprus Chamber of Commerce and Industry
Chamber Building
38 Grivas Dhigenis Ave
3 Deligiorgis Street
PO Box 1455
Nicosia
Tel. (2) 449500/462312
Fax (2) 458630

TÜRKIYE

Pres Gazete Kitap Dergi
Pazarlama Dağitim Ticaret ve sanayi AŞ
Narlibahçe Sokak N. 15
Istanbul-Cağaloğlu
Tel. (1) 520 92 96 - 528 55 66
Fax 520 64 57
Telex 23822 DSVO-TR

ISRAEL

ROY International
PO Box 13056
41 Mishmar Hayarden Street
Tel Aviv 61130
Tel. 3 496 108
Fax 3 544 60 39

CANADA

Renouf Publishing Co. Ltd
Mail orders — Head Office:
1294 Algoma Road
Ottawa, Ontario K1B 3W8
Tel. (613) 741 43 33
Fax (613) 741 54 39
Telex 0534783

Ottawa Store:
61 Sparks Street
Tel. (613) 238 89 85

Toronto Store:
211 Yonge Street
Tel. (416) 363 31 71

UNITED STATES OF AMERICA

UNIPUB
4611-F Assembly Drive
Lanham, MD 20706-4391
Tel. Toll Free (800) 274 4888
Fax (301) 459 0056

AUSTRALIA

Hunter Publications
58A Gipps Street
Collingwood
Victoria 3066
Tel. (3) 417 5361
Fax (3) 419 7154

JAPAN

Kinokuniya Company Ltd
17-7 Shinjuku 3-Chome
Shinjuku-ku
Tokyo 160-91
Tel. (03) 3439-0121

Journal Department
PO Box 55 Chitose
Tokyo 156
Tel. (03) 3439-0124

SINGAPORE

Legal Library Services Ltd
STK Agency
Robinson Road
PO Box 1817
Singapore 9036

AUTRES PAYS
OTHER COUNTRIES
ANDERE LÄNDER

Office des publications officielles
des Communautés européennes
2, rue Mercier
L-2985 Luxembourg
Tél. 499 28 1
Télex PUBOF LU 1324 b
Fax 48 85 73/48 68 17

10/92

CD-NA-12557-EN-C

NOTICE TO THE READER

All scientific and technical reports published by the Commission of the European Communities are announced in the monthly periodical **'euro abstracts'**. For subscription (1 year: ECU 118) please write to the address below.

Price (excluding VAT) in Luxembourg: ECU 20

ISBN 92-826-5330-7

OFFICE FOR OFFICIAL PUBLICATIONS
OF THE EUROPEAN COMMUNITIES

L-2985 Luxembourg

9 789282 653302